动力卡盘选用表（供参考）：Power chuck selection table （For your reference）

使用设备 Use the equipment	工件类型 Artifact types	夹持部形状 Clamp position shape	夹持形式 Clamping form	卡盘规格 Chuck spec	4	5	6	8	10	12	15	18	页码 page number
工件旋转型（车床） Workpiece rotary type（lathe）	轴类 管状类 Shaft-type workpiece pipe-type workpiece	圆形 Circular	插入夹持 Inserted into the clamping	3K	○	○	○	○	○	○	○	○	01
			超规格直径工件 Exceed specification diameter workpiece	3KD			○	○	○	○	○	○	04
			大口径夹持(油井管道) Large caliber clamping (Oil well pipe)	3KQ	请参看相关页面								19
			越过工件突起部夹持 Skip the big diameter clamping	3KC		○	○	○	○	○			05
				3SC									12
			精加工 Precision machining	CL	请参看相关页面								16
				HT									17
	（工件穿过卡盘通孔） Insertion of workpiece axis into chuck required	角形 Polygon	两面夹持 Both sides clamping	2K	○	○	○	○	○	○	○		02
			四面夹持 Four side clamping	4K			○	○	○	○	○	○	03
			越过工件突起部夹持 Skip the big diameter clamping	2KC		○	○	○	○	○			06
				2SC									13
	法兰类 盘状类 Plate-type workpiece, Flange-type workpiece	圆形 circular	直接夹持 Direct clamping	3S	○	○	○	○	○	○	○	○	07
													08
			立式车床 Vertical lathe	3SL	请参看相关页面								11
			前置气压缸 with built-in cylinder	3SQ			○	○					20
			易变形工件 Easy deform workpiece	3ZX			○	○	○				25
			精加工(气密检测确认) Precision machining (Airtight test confirmation)	3XM			○	○	○				21
				3SM			○	○	○				23
		角形 Polygon	两面夹持 Both sides clamping	2S	○	○	○	○	○	○	○		9
			四面夹持 Four side clamping	4S			○	○	○	○	○	○	10
				4SK			○	○	○	○	○	○	14
			易变形工件 Easy deform workpiece	2ZX			○	○	○				26
			精加工(气密检测确认) Precision machining (Airtight test confirmation)	2XM			○	○	○				22
				2SM									24
			单面基准(固定爪) single sided standard (fixed jaw)	1SC			○	○	○				15
	中心基准(两顶尖) Center the benchmark（The center of the two ends of the shaft）	圆形 Circular	中心补偿夹持 Center compensates clamping	3BD			○	○					18
刀具旋转型（铣床、钻床加工中心） Cutting tool rotary type（Drill. Milling. Machining center）	法兰类、盘状类 Plate-type workpiece, Flange-type workpiece	圆形 Circular	直接夹持 Direct clamping	3NL			○	○					29
	轴类、盘状类 Shaft-type workpiece Flange-type workpiece		插入夹持 Inserted into the clamping	3KL		○	○	○	○	○			28

注：3KL系列立式夹盘的上部卡盘，可根据工件形状的不同而更换相应的卡盘，如更换2K系列卡盘，可作两面夹持，更换3KC系列卡盘，可作越过工件突起部夹持等。

The upper chuck，It can be replaced according to the workpiece，Switch to the "2K" series，Can Both sides clamping，Switchto the "3KC" series，You can skip the big diameter clamping etc.

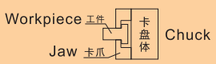

Skip the big diameter clamping The sample.

卡盘,回转缸配用参考表: Chuck and Cyliuder Matching Refer table

卡盘规格 The specifications of the chuck	适用油缸 Matching the oil cylinder	最大使用压力 Max. pressure Mpa (kgf/cm²)	卡盘规格 The specifications of the chuck	适用油缸 Matching the oil cylinder	最大使用压力 Max. pressure Mpa (kgf/cm²)
2K-04	KY-428T	1.9(19)	2S-04	SY-65	1.9(19)
3K-04		2.1(21)	3S-04	SY-80	1.9(19)
2K-05	KY-536T	1.8(18)	2S-05	SY-65	1.9(19)
3K-05		2.6(26)	3S-05	SY-80	1.9(19)
2KC-05		1.6(16)	2S-06	SY-100 SY-100K	1.7(17)
3KC-05		2.4(24)	3S-06		2.5(25)
2K-06	KY-646T	1.7(17)	4S-06		2.5(25)
3K-06		2.5(25)	1SC-06		1.7(17)
4K-06		2.5(25)	3BD-06		2.1(21)
2KC-06		1.9(19)	2ZX-06		0.8(8)
3KC-06		2.8(28)	3ZX-06		1.2(12)
3KD-06	KY-852T	1.9(19)	2XM-06	SY-75Q	1.7(17)
2K-08		1.9(19)	3XM-06		2.5(25)
3K-08		2.8(28)	2S-08	SY-125 SY-125K	1.5(15)
4K-08		2.8(28)	3S-08		2.3(23)
2KC-08		1.9(19)	4S-08		2.3(23)
3KC-08		2.8(28)	1SC-08		1.4(14)
3KD-08	KY-1075T	2.2(22)	3BD-08	SY-100	2.8(28)
2K-10		1.8(18)	2XM-08	SY-100Q	1.5(15)
3K-10		2.6(26)	3XM-08		2.2(22)
4K-10		2.6(26)	2SM-06		2.4(24)
2KC-10		2.0(20)	3SM-06		2.6(26)
3KC-10		2.9(29)	2SM-08		3.4(34)
3KD-10	KY-1291T	2.6(26)	3SM-08		3.6(36)
2K-12		1.8(18)	2ZX-08	SY-100 SY-100K	1.7(17)
3K-12		2.6(26)	3ZX-08		2.5(25)
4K-12		2.6(26)	2S-10	SY-125 SY-125K	1.8(18)
2KC-12		1.9(19)	3S-10		2.6(26)
3KC-12		2.8(28)	4S-10		2.6(26)
3KD-12	KY-1512T	2.0(20)	2S-12	SY-150	1.7(17)
2K-15		1.7(17)	3S-12		2.6(26)
3K-15		2.4(24)	4S-12		2.6(26)
4K-15		2.4(24)	2S-15	SY-200	1.9(19)
3K-18		2.4(24)	3S-15		3.2(32)
4K-18		2.4(24)	3S-18		3.2(32)
3KD-15	KY-2114T	2.4(24)	2XM-10	SY-125Q	1.3(13)
3KD-18	KY-2416T	2.2(22)	3XM-10		1.9(19)
HT-26	KY-536T	2.6(26)	2SM-10		3.2(32)
CL-30		3.0(30)	3SM-10		3.2(32)
HT-35	KY-646T	2.5(25)	3SL-15	SY-200	3.2(32)
CL-42		2.9(29)	3SL-18		3.2(32)
HT-42		2.9(29)	3SL-21		3.2(32)
HT-52	KY-852T	2.3(23)	3SL-24		3.2(32)
CL-60	KY-1068T	1.8(18)	3SL-32		3.2(32)
4SK-08	SY-120B(ZB)	1.7(17)	3SL-40	SY-250	4.0(40)
4SK-10	SY-125B(ZB)	2.2(22)	3SL-50		4.0(40)
4SK-12		2.7(27)			

目录 INDEX

动力卡盘 POWER CHUCK

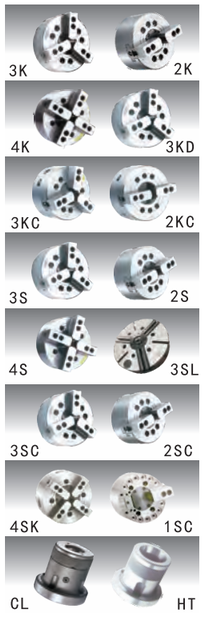

标准卡盘 STANDARD CHUCK

特殊卡盘 SPECIAL CHUCK

立式夹盘 STATIONARY CHUCK

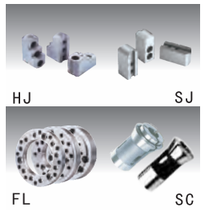

附件 ACCESSORIES

目录 INDEX

气压回转缸 PNEUMATIC ROTARY CYLINDER

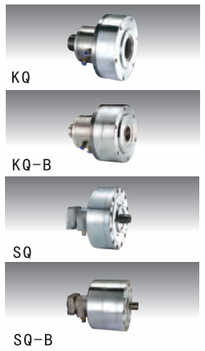

中空气缸 THE HOLLOW CYLINDER / 中实气缸 ROTATING AIR CYLINDER

油压回转缸 HYDRAULIC ROTARY CYLINDER

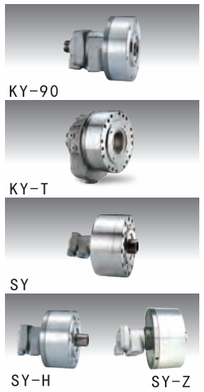

中空油缸 ROTATING HYDRAULIC CYLINDER WITH THROUGH-HOLE

中实油缸 ROTATING HYDRAULIC CYLINDER

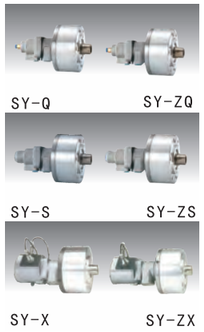

辅助功能中实油缸 HAS THE AUXILARY FUNCTION ROTATING HYDRAULIC CYLINDER

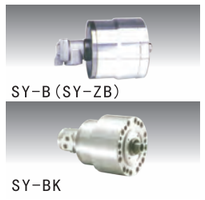

双杆油缸 DOUBLE ROD ROTATING CYLINDER

附件 ACCESSORIES

3K 三爪中空动力卡盘

3-JAW THROUGH-HOLE POWER CHUCK

- 高速运转平稳，坚固耐用，
- 重复定位精度高，夹紧力大，适合自动化生产。

- High speed stability, Strong and durable.
- High accuracy of repeat positioning,Clamping force is big, Suitable for automatic production.

POWER CHUCK

尺寸图 Size Fig

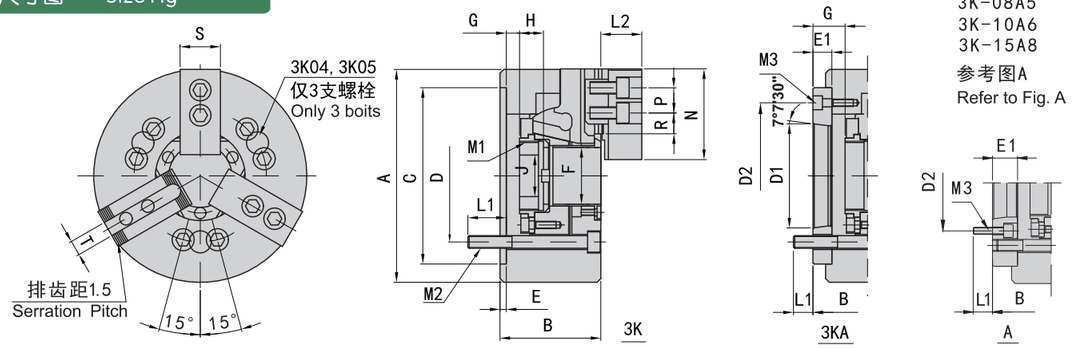

尺寸参数 Dimensions

mm

规格 Spec / 型号 Model		A	B		C (H6)	D	D1	D2	E	E1	F	G max		G min		H	J
3K-04		110	59		85	70.6	—	—	4	—	26	3.5		-6.5		17.5	12
3K-05	A4	135	60	71	110	82.6	63.51	96		15	33	1	16	-9	6	20	
3K-06	A5	169	81	91	140	104.8	82.56	116			45	11	26	-1	14	19	20
3K-08	A5	210	91	109	170	133.4		104.8	5	23	52	14.5	37.5	-1.5	21.5	20.5	30
	A6			103			106.38	150		17			31.5		15.5		
3K-10	A6	254	100	120	220	171.4		133.4		25	75	8.5	33.5	-10.5	14.5	25	45
	A8			113				190		18			26.5		7.5		
3K-12	A8	304	110	122			139.72		6	18	91	8	26	-15	3	28	50
3K-15	A8	381	133	160	300	235		171.4		33	120	11	44	-12	21	39	60
	A11			149			196.87	260		22			33		10		
3K-18	A11	450															

尺寸参数 Dimensions

mm

规格 Spec / 型号 Model		L1		L2	M1	M2	M3	N	P	R max	R min	S	T
3K-04		16		24	M32X1.5	3-M10	—	52	14	11.3	6.8	25	10
3K-05	A4	15	15	31	M40X1.5		3-M6	62		19.8	7.8		
3K-06	A5	16	16	37	M55X2	6-M10		73	20	22.8	9.3	31	12
3K-08	A5	20	17	38	M60X2	6-M12	6-M10	95	25	29.8	14.8	35	14
	A6		18				3-M6						
3K-10	A6	22		43	M85X2	6-M16	6-M12	110	30	33.8	14.3	40	16
	A8		24				3-M8						
3K-12	A8	23	25	51	M100X2		3-M8	130	30	45.8	15.8	50	21
3K-15	A8	30	24	63	M130X2	6-M20	6-M16	165	43	47.3	18.2	62	25.5 or 22
	A11		28				3-M10						
3K-18	A11									79.2			

性能参数 Specifications

规格 Spec / 型号 Model		楔心行程 Piunger stroke(mm)	爪行程(直径) Jaw stroke (Dia.)mm	许用推拉力 Max.Pull force KN(kgf)	最大夹紧力 Max. Gripping forceKN(kgf)	极限转速 Max. Speed r/min	夹紧范围 Gripping range(mm)	惯量 Moment of inertialKg.m²	重量 Weight kg		适用油缸 Matching cylinder	最大使用压力 Max.pressure MPa(kgf/cm²)
3K-04		10	5.4	13.7(1400)	28.4(2900)	8000	7-110	0.01	4		KY-428T	2.1(21)
3K-05	A4			17.1(1750)	35.8(3650)	7000	12-135	0.02	6.7	7.5	KY-536T	2.6(26)
3K-06	A5	12	5.5	21.5(2200)	56.8(5800)	6000	15-168	0.06	11.9	13.7	KY-646T	2.5(25)
3K-08	A5	16	7.4	34.3(3500)	85.8(8750)	5000	13-210	0.18	22.5	25.4	KY-852T	2.8(28)
	A6									23.6		
3K-10	A6	19	8.8	42.6(4380)	110.7 (11300)	4200	31-254	0.33	34.5	41.5	KY-1075T	2.6(26)
	A8									40		
3K-12	A8	23	10.6	54.9(5600)	143.6(14650)	3300	34-304	0.77	56.6	59.5	KY-1291T	2.6(26)
3K-15	A8			71(7250)	179.8(18350)	2500	50-381	2.47	120	134	KY-1512T	2.4(24)
	A11							2.39		127		
3K-18	A11					2000	50-450	4.78	164	178		

注:红色数据为3KA型的尺寸
The dimensions and the specifications of 3KA type are in the red data.

2K 二爪中空动力卡盘

2-JAW THROUGH-HOLE POWER CHUCK

- 高速运转平稳，坚固耐用。
- 重复定位精度高，夹紧力大。
- 特别适合异形工件的夹持。

- High speed stability, Strong and durable.
- High accuracy of repeat positioning,Clamping force is big.
- Specially suited for irregular shape.

POWER CHUCK

尺寸图 Size Fig

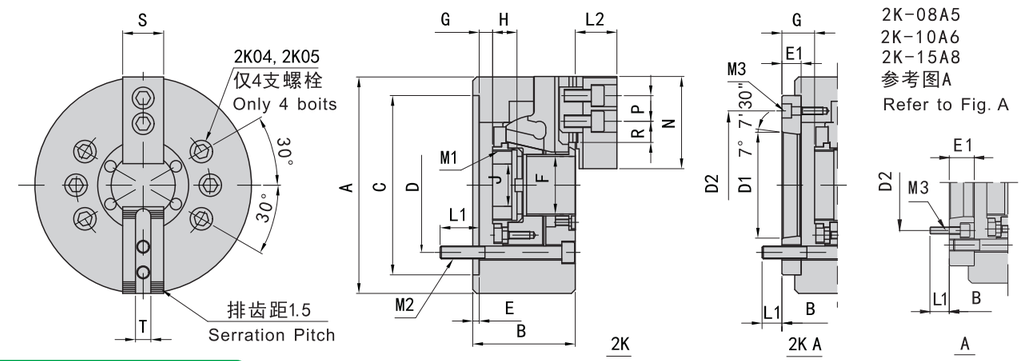

尺寸参数 Dimensions

mm

规格 Spec / 型号 Model		A	B		C (H6)	D	D1	D2	E	E1	F	G max		G min		H	J
2K-04		110	59		85	70.6	—	—	4	—	26	3.5		-6.5		17.5	12
2K-05	A4	135	60	71	110	82.6	63.51	96		15	33	1	16	-9	6	20	
2K-06	A5	169	81	91	140	104.8	82.56	116			45	11	26	-1	14	19	20
2K-08	A5	210	91	109	170	133.4		104.8	5	23	52	14.5	37.5	-1.5	21.5	20.5	30
	A6			103			106.38	150		17			31.5		15.5		
2K-10	A6	254	100	120	220	171.4		133.4		25	75	8.5	33.5	-10.5	14.5	25	45
	A8			113				190		18			26.5		7.5		
2K-12	A8	304	110	122			139.72		6	18	91	8	26	-15	3	28	50
2K-15	A8	381	133	160	300	235		171.4		33	120	11	44	-12	21	39	60
	A11			149			196.87	260		22			33		10		

尺寸参数 Dimensions

mm

规格 Spec / 型号 Model		L1		L2	M1	M2	M3	N	P	R max	R min	S	T
2K-04		16		24	M32X1.5	4-M10	—	52	14	11.3	6.8	25	10
2K-05	A4	15	15	31	M40X1.5		4-M6	62		19.8	7.8		
2K-06	A5	16	16	37	M55X2	6-M10		73	20	22.8	9.3	31	12
2K-08	A5	20	17	38	M60X2	6-M12	6-M10	95	25	29.8	14.8	35	14
	A6		18				4-M6						
2K-10	A6	22		43	M85X2	6-M16	6-M12	110	30	33.8	14.3	40	16
	A8		24				4-M8						
2K-12	A8	23	25	51	M100X2		4-M8	130	30	45.8	15.8	50	21
2K-15	A8	30	24	63	M130X2	6-M20	6-M16	165	43	47.3	18.2	62	25.5 or22
	A11		28				4-M10						

性能参数 Specifications

规格 Spec / 型号 Model		楔心行程 Piunger stroke(mm)	爪行程(直径) Jaw stroke (Dia.)mm	许用推拉力 Max.Pull force KN(kgf)	最大夹紧力 Max. Gripping forceKN(kgf)	极限转速 Max. Speed r/min	夹紧范围 Gripping range(mm)	惯量 Moment of inertialKg.m²	重量 Weight kg		适用油缸 Matching cylinder	最大使用压力 Max.pressure MPa(kgf/cm²)
2K-04		10	5.4	9.2(940)	18.9(1930)	8000	7-110	0.01	3.8		KY-428T	1.9(19)
2K-05	A4			11.7(1190)	23.9(2440)	7000	12-135	0.02	6.5	7.3	KY-536T	1.8(18)
2K-06	A5	12	5.5	14.4(1470)	37.9(3870)	6000	15-168	0.06	11.5	13.3	KY-646T	1.7(17)
2K-08	A5	16	7.4	23.1(2360)	57.2(5840)	5000	13-210	0.17	21.3	24.2	TK-852T	1.9(19)
	A6									22.4		
2K-10	A6	19	8.8	28.4(2900)	73.9(7540)	4200	31-254	0.31	33.5	40.5	KY-1075T	1.8(18)
	A8									39		
2K-12	A8	23	10.6	36.7(3740)	95.8(9780)	3300	34-304	0.70	59.7	62.7	KY-1291T	1.8(18)
2K-15	A8			46.9(4790)	119.6(12200)	2500	50-381	2.42	115	129	KY-1512T	1.7(17)
	A11							2.34		122		

注:红色数据为2KA型的尺寸
The dimensions and the specifications of 2KA type are in the red data.

4K 四爪中空动力卡盘

4-JAW THROUGH-HOLE POWER CHUCK

- 高速运转平稳，坚固耐用。
- 重复定位精度高，夹紧力大。
- 特别适合异形工件的夹持。

- High speed stability, Strong and durable.
- High accuracy of repeat positioning,Clamping force is big.
- Specially suited for irregular shape.

尺寸图 Size Fig

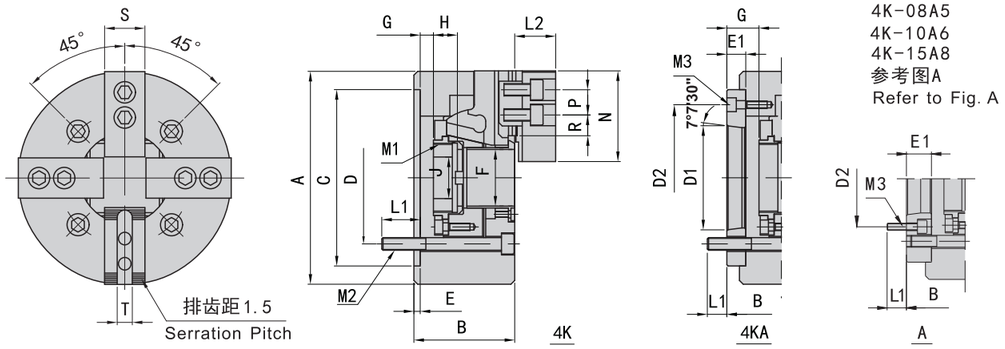

尺寸参数 Dimensions

mm

规格 Spec / 型号 Model		A	B		C (H6)	D	D1	D2	E	E1	F	G max	G min	H	J
4K-06	A5	169	81	91	140	104.8	82.56	116	5	15	45	11	26	-1	14	19	20
4K-08	A5	210	91	109	170	133.4		104.8		23	52	14.5	37.5	-1.5	21.5	20.5	30
	A6			103			106.38	150		17			31.5		15.5		
4K-10	A6	254	100	120	220	171.4		133.4		25	75	8.5	33.5	-10.5	14.5	25	45
	A8			113			139.72	190		18			26.5		7.5		
4K-12	A8	304	110	122					6	18	91	8	26	-15	3	28	50
4K-15	A8	381	133	160	300	235		171.4		33	120	11	44	-12	21	39	60
	A11			149			196.87	260		22			33		10		
4K-18	A11	450															

尺寸参数 Dimensions

mm

规格 Spec / 型号 Model		L1		L2	M1	M2	M3	N	P	R max	R min	S	T
4K-06	A5	16	16	37	M55X2	4-M10	4-M6	73	20	22.8	9.3	31	12
4K-08	A5	20	17	38	M60X2	4-M12	6-M10	95	25	29.8	14.8	35	14
	A6		18				4-M6						
4K-10	A6	22		43	M85X2	4-M16	6-M12	110	30	33.8	14.3	40	16
	A8		24				4-M8						
4K-12	A8	23	25	51	M100X2		4-M8	130	30	45.8	15.8	50	21
4K-15	A8	30	24	63	M130X2	4-M20	6-M16	165	43	47.3	18.2	62	25.5 or 22
	A11		28				4-M10						
4K-18	A11									79.2			

性能参数 Specifications

规格 Spec / 型号 Model		楔心行程 Piunger stroke(mm)	爪行程(直径) Jaw stroke (Dia.) mm	许用推拉力 Max.Pull force KN(kgf)	最大夹紧力 Max. Gripping forceKN(kgf)	极限转速 Max. Speed r/min	夹紧范围 Gripping range(mm)	惯量 Moment of inertialKg.m²	重量 Weight kg		适用油缸 Matching cylinder	最大使用压力 Max.pressure MPa(kgf/cm²)
4K-06	A5	12	5.5	21.5(2200)	56.8(5800)	5000	15-168	0.07	12.5	14.3	KY-646T	2.5(25)
4K-08	A5	16	7.4	34.3(3500)	85.8(8750)	4200	13-210	0.19	23.5	25.4	KY-852T	2.8(28)
	A6									24		
4K-10	A6	19	8.8	42.6(4380)	110.7 (11300)	3400	31-254	0.34	36	41	KY-1075T	2.6(26)
	A8									39		
4K-12	A8	23	10.6	54.9(5600)	143.6(14650)	2700	34-304	0.79	62	65	KY-1291T	2.6(26)
4K-15	A8			71(7250)	179.8(18350)	2000	50-381	2.50	124	138	KY-1512T	2.4(24)
	A11							2.42		130		
4K-18	A11					1700	50-450	4.85	170	184		

注:红色数据为4KA型的尺寸
The dimensions and the specifications of 4KA type are in the red data.

3KD 三爪大通孔动力卡盘

3-JAW LARGE THRU-HOLE POWER CHUCK

- 高速运转平稳，坚固耐用，
- 重复定位精度高，夹紧力大，适合自动化生产。

- High speed stability, Strong and durable.
- High accuracy of repeat positioning,Clamping force is big, Suitable for automatic production.

尺寸图 Size Fig

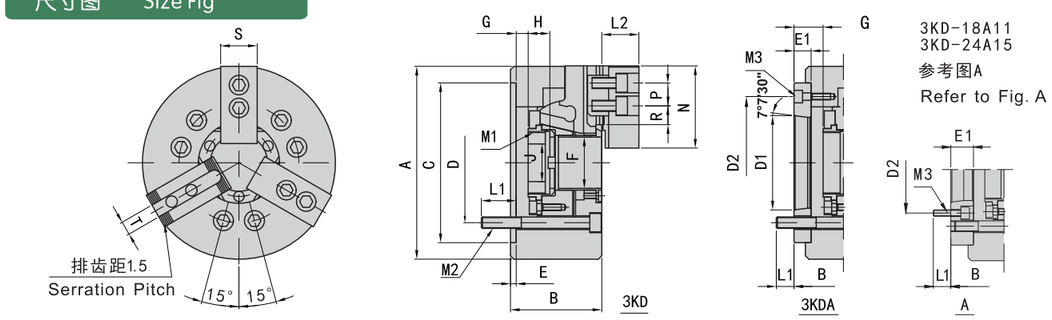

尺寸参数 Dimensions

mm

规格 Spec / 型号 Model		A	B		C (H6)	D	D1	D2	E	E1	F	G max	G min		H	J
3KD-06	A5	170	81	91	140	104.8	82.56	116	5	15	53	11	26	-1	14	19	20
3KD-08	A6	210	91	103	170	133.4	106.38	150		17	66	14.5	31.5	-1.5	15.5	20	30
3KD-10	A8	260	100	113	220	171.4	139.72	190		18	86	8.5	26.5	-10.5	7.5	25	45
3KD-12	A11	315	110	126	300	235	196.87	260		22	106	8	30	-15	7	28	50
3KD-15	A15	405	133	154	380	330.2	285.78	330.2	6	27	140	11	38	-12	15	39	60
3KD-18	A11	455	133	161			196.87	260		33	166.5	11.5	44.5	-13	20	38	
	A15						285.78	330.2		27		11.5	39	-13	14.5		
3KD-21	A15	530	140							27	180	11	38	-12	15	39	
3KD-24	A15	610	147	181	520	463.6				40	205	18	58	-8	32	40	120
	A20			168			412.78	463.6		27			45		19		

尺寸参数 Dimensions

mm

规格 Spec / 型号 Model		L1		L2	M1	M2	M3	N	P	R max	R min	S	T
3KD-06	A5	16	16	37	M60X2	6-M10	3-M6	73	20	22.8	9.3	31	12
3KD-08	A6	20	18	38	M75X2	6-M12	3-M6	95	25	23.8	11.3	35	14
3KD-10	A8	22	24	43	M95X2	6-M16	3-M8	110	30	32.3	14.3	40	16
3KD-12	A11	30	28	51	M115X2	6-M20	3-M10	130	30	45.8	15.8	50	21
3KD-15	A15	35	38	63	M155X3		3-M12			43.8			25.5
3KD-18	A11	30	28	66	M180X3	6-M24	3-M10	165	43	79.2	18.2	62	22
	A15						3-M12						25.5
3KD-21	A15		38		M190X3		3-M12			69.5			
3KD-24	A15	35	35	73		6-M24	6-M24	180	60		21.5	65	25
	A20		38		M215X3		3-M12			93.5			

性能参数 Specifications

规格 Spec / 型号 Model		楔心行程 Piunger stroke(mm)	爪行程(直径) Jaw stroke (Dia.) mm	许用推拉力 Max.Pull force KN(kgf)	最大夹紧力 Max. Gripping forceKN(kgf)	极限转速 Max. Speed r/min	夹紧范围 Gripping range(mm)	惯量 Moment of inertialKg.m²	重量 Weight kg		适用油缸 Matching cylinder	最大使用压力 Max.pressure MPa(kgf/cm²)
3KD-06	A5	12	5.5	22(2250)	58.3(5950)	6000	18-170	0.06	11	12.8	KY-852T	1.9(19)
3KD-08	A6	16	7.4	39.4(4020)	98.5(10050)	5000	23-210	0.15	23	24.1	KY-1068T	2.2(22)
3KD-10	A8	19	8.8	49.1(5010)	126.9(12950)	4500	46-260	0.32	33.2	38.7	KY-1287T	2.6(26)
3KD-12	A11	23	10.6	58.8(6000)	152.9(15600)	3500	47-315	0.73	51	58	KY-1511T	2.0(20)
3KD-15	A15			71(7240)	179.8(18350)	2500	60-405	2.3	128	139	KY-2114T	2.4(24)
3KD-18	A11	24.5	11.3			2000	80-455	4.78	156	175	KY-2416T	2.3(23)
	A15									177		
3KD-21	A15			90(9180)	233.8(23860)	1700	104-530	7.5	223	234	KY-2820T	2.1(21)
3KD-24	A15	26	12			1400	128-610	14.8	270	315		
	A20									284		

注:红色数据为3KDA型的尺寸
The dimensions and the specifications of 3KDA type are in the red data.

3KC 三爪长行程动力卡盘

3-JAW EXTRA LONG JAW STROKE POWER CHUCK

- 三爪中空型、超长爪行程。
- 可解决越过大直径夹持。
- 高刚性结构及高夹持精度。

- It's a 3-jaw hollow type，and extra long jaw stroke
- It can Skip the big diameter clamping
- Construction of High rigidity and high clamping accuracy.

POWER CHUCK

尺寸图 Size Fig

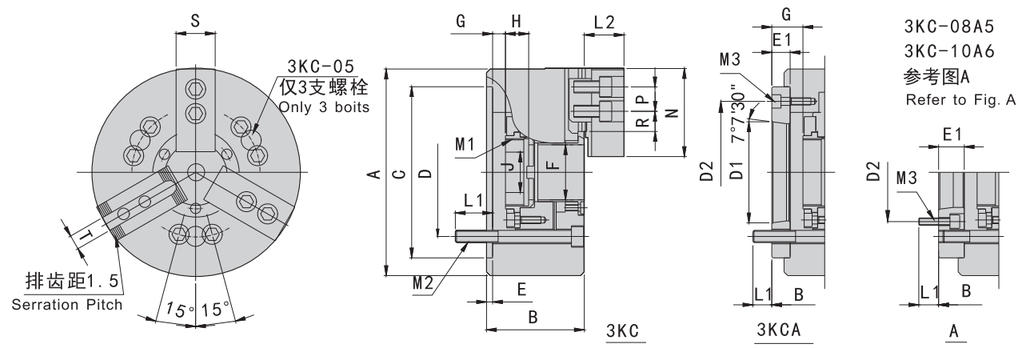

尺寸参数 Dimensions

mm

规格 Spec 型号 Model		A	B		C (H6)	D	D1	D2	E	E1	F	G max		G min		H	J
3KC-05	A4	135	65	76	110	82.6	63.51	96	4	15	32	1	16	-11	4	20	12
3KC-06	A5	169	84	97	140	104.8	82.56	116	5	18	42	6.5	24.5	-8.5	9.5	19	20
3KC-08	A5	210	96	118	170	133.4		104.8		27	52	7	34	-13	14	20	30
	A6			114			106.38	150		23			30		10		
3KC-10	A6	254	110	130	220	171.4		133.4		25	70	8	33	-17	8	25	45
	A8			123			139.72	190		18			26		1		
3KC-12	A8	304	127	140	220	171.4	139.72	190	5	18	91	15	33	-15	3	28	50

尺寸参数 Dimensions

mm

规格 Spec 型号 Model		L1		L2	M1	M2	M3	N	P	R max	R min	S	T
3KC-05	A4	15	15	31	M40X1.5	3-M10	3-M6	62	14	23	13.7	25	10
3KC-06	A5	18	15	37	M55X2	6-M10		73	20	25.7	13.7	28	12
3KC-08	A5	18	17	38	M60X2	6-M12	6-M10	95	25	28.3	16.3	35	14
	A6		18				3-M6						
3KC-10	A6	22		43	M85X2	6-M16	6-M12	110	30	35.3	17.3	40	16
	A8		24				3-M8						
3KC-12	A8	20	19	51	M100X2			130		46.3	19.3	50	21

性能参数 Specifications

规格 Spec 型号 Model		楔心行程 Plunger stroke(mm)	爪行程(直径) Jaw stroke (Dia.)mm	许用推拉力 Max.Pull force KN(kgf)	最大夹紧力 Max. Gripping forceKN(kgf)	极限转速 Max. Speed r/min	夹紧范围 Gripping range(mm)	惯量 Moment of inertialKg.m²	重量 Weight kg		适用油缸 Matching cylinder	最大使用压力 Max. pressure MPa(kgf/cm²)
3KC-05	A4	12	18	15.6(1590)	17.2(1750)	4200	6-135	0.02	7.2	8	KY-536T	2.4(24)
3KC-06	A5	15	24	23.5(2400)	26(2650)	3600	10-169	0.063	13	14.8	KY-646T	2.8(28)
3KC-08	A5	20	32	34.3(3500)	36.0(3670)	3000	10-210	0.175	23	25.9	KY-852T	2.8(28)
	A6									24.1		
3KC-10	A6	25	37.5	47.7(4870)	50.0(5100)	2400	18-254	0.35	38	45	KY-1075T	2.9(29)
	A8									43.5		
3KC-12	A8	30	45	64.7(6600)	68.0(6940)	2100	30-304	0.83	62	67.5	KY-1291T	3.0(30)

注:红色数据为3KCA型的尺寸
The dimensions and the specifications of 3KCA type are in the red data.

2KC 二爪长行程动力卡盘

2-JAW EXTRA LONG JAW STROKE POWER CHUCK

- 二爪中空型、超长爪行程。
- 可解决越过大直径夹持。
- 高刚性结构及高夹持精度。

- It's a 2-jaw hollow type，and extra long jaw stroke
- It can Skip the big diameter clamping
- Construction of High rigidity and high clamping accuracy.

POWER CHUCK

尺寸图 Size Fig

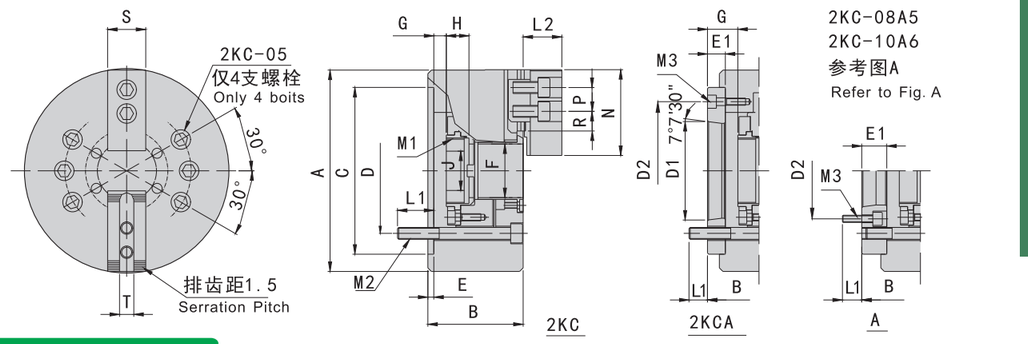

尺寸参数 Dimensions

mm

规格 Spec 型号 Model		A	B		C (H6)	D	D1	D2	E	E1	F	G max		G min		H	J
2KC-05	A4	135	65	76	110	82.6	63.51	96	4	15	32	1	16	-11	4	20	12
2KC-06	A5	169	84	97	140	104.8	82.56	116	5	18	42	6.5	24.5	-8.5	9.5	19	20
2KC-08	A5	210	96	118	170	133.4		104.8		27	52	7	34	-13	14	20	30
	A6			114			106.38	150		23			30		10		
2KC-10	A6	254	110	130	220	171.4		133.4		25	70	8	33	-17	8	25	45
	A8			123			139.72	190		18			26		1		
2KC-12	A8	304	127	140	220	171.4	139.72	190	5	18	91	15	33	-15	3	28	50

尺寸参数 Dimensions

mm

规格 Spec 型号 Model		L1		L2	M1	M2	M3	N	P	R max	R min	S	T
2KC-05	A4	15	15	31	M40X1.5	4-M10	4-M6	62	14	23	13.7	25	10
2KC-06	A5	18	15	37	M55X2	6-M10		73	20	25.7	13.7	28	12
2KC-08	A5	18	17	38	M60X2	6-M12	6-M10	95	25	28.3	16.3	35	14
	A6		18				4-M6						
2KC-10	A6	22		43	M85X2	6-M16	6-M12	110	30	35.3	17.3	40	16
	A8		24				4-M8						
2KC-12	A8	20	19	51	M100X2			130		46.3	19.3	50	21

性能参数 Specifications

规格 Spec 型号 Model		楔心行程 Plunger stroke(mm)	爪行程(直径) Jaw stroke (Dia.)mm	许用推拉力 Max.Pull force KN(kgf)	最大夹紧力 Max. Gripping forceKN(kgf)	极限转速 Max. Speed r/min	夹紧范围 Gripping range(mm)	惯量 Moment of inertialKg.m²	重量 Weight kg		适用油缸 Matching cylinder	最大使用压力 Max. pressure MPa(kgf/cm²)
2KC-05	A4	12	18	10.4(1060)	11.4(1165)	4200	6-135	0.018	6.9	8	KY-536T	1.6(16)
2KC-06	A5	15	24	15.7(1600)	17.2(1760)	3600	10-169	0.061	12.6	14.4	KY-646T	1.9(19)
2KC-08	A5	20	32	22.8(2330)	24(2450)	3000	10-210	0.17	22	24.9	KY-852T	1.9(19)
	A6									23.1		
2KC-10	A6	25	37.5	31.8(3240)	33.3(3400)	2400	18-254	0.34	37	44	KY-1075T	2.0(20)
	A8									42.5		
2KC-12	A8	30	45	43.1(4400)	45.3(4630)	2100	30-304	0.8	60	65.5	KY-1291T	1.9(19)

注:红色数据为2KCA型的尺寸
The dimensions and the specifications of 2KCA type are in the red data.

3S 三爪中实动力卡盘(1)

3-JAW POWER CHUCK(1)

- 高速运转平稳，坚固耐用。
- 重复定位精度高，夹紧力大。
- 适合自动化生产。

- High speed stability, Strong and durable.
- High accuracy of repeat positioning,Clamping force is big.
- Suitable for automatic production.

尺寸图 Size Fig

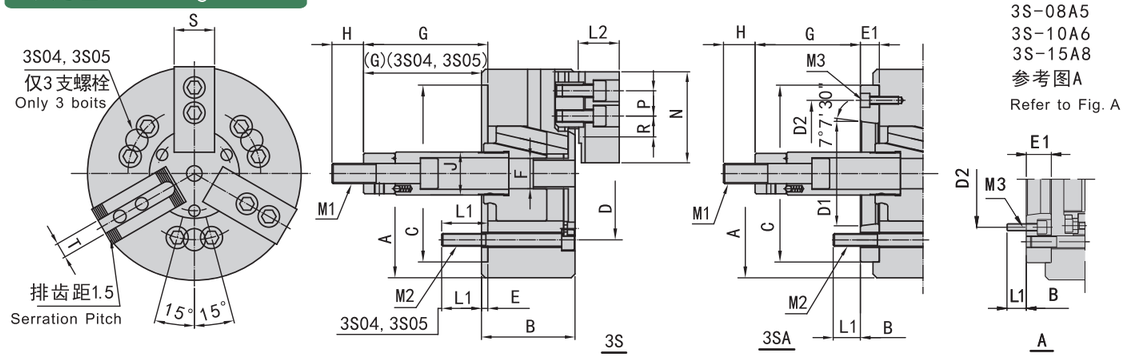

尺寸参数 Dimensions

mm

规格 Spec / 型号 Model		A	B	C (H6)	D	D1	D2	E	E1	F	G max	G min	H	J
3S-04		110	52	60	80	—	—	6	—	—	18	3	25	26
3S-05		135	55	80	100			7			9	-6	35	28
3S-06	A5	165	74	84	140	104.8	116		15	21	101.5	86.5	81.5	66.5	34
3S-08	A5	210	85	103	170	133.4	82.56	104.8	5	23	25	127	104	106	83	38
	A6			97			106.38	150		17			110		89	
3S-10	A6	254	89	109	220	171.4		133.4		25	34	158	133	133	108	45
	A8			102			139.72	190		18		163	140		115	
3S-12	A8	304	106	118					6				145			50
3S-15	A8	381	114	141	300	235		171.4		33	—	104	71	69	36	55	60
	A11			130			196.87	260		22			82		47		

尺寸参数 Dimensions

mm

规格 Spec / 型号 Model		L1		L2	M1	M2	M3	N	P	R max	R min	S	T
3S-04		12		25	M10X1.5	3-M8	—	52	14	11.3	8.3	25	10
3S-05		14		32	M12X1.75			62		13.5	6		
3S-06	A5	14	14	39	M16X2	6-M10	3-M6	73	20	18	7.5	31	12
3S-08	A5	20	17	41	M20X2.5	6-M12	6-M10	95	25	22.3	11.8	35	14
	A6		18				3-M6						
3S-10	A6	18		46		6-M16	6-M12	110	30	30.8	11.3	40	16
	A8		25				3-M8						
3S-12	A8	22		54				130	30	48.8	12.3	50	18
3S-15	A8	30	29	63	M30X3.5	6-M20	6-M16	165	43	48.8	23.3	62	25.5
	A11		33				3-M10						

性能参数 Specifications

规格 Spec / 型号 Model		楔心行程 Plunger stroke(mm)	爪行程(直径) Jaw stroke (Dia.) mm	许用推拉力 Max.Pull force KN(kgf)	最大夹紧力 Max. Gripping forceKN(kgf)	极限转速 Max. Speed r/min	夹紧范围 Gripping range(mm)	惯量 Moment of inertialKg.m²	重量 Weight kg		适用油缸 Matching cylinder	最大使用压力 Max.pressure MPa(kgf/cm²)
3S-04		15	6.9	8.1(830)	22.5(2300)	6000	5-110	0.01	4.1		SY-80	1.9(19)
3S-05					25(2550)	5500	14-135	0.02	6.2		SQ-130	0.6(6)
3S-06	A5	20	9.2	17.9(1830)	52.4(5350)	5250	14-165	0.05	13	14	SY-100	2.5(25)
3S-08	A5	21	9.7	25(2550)	74.5(7600)	4750	17-210	0.14	24	28	SY-125	2.3(23)
	A6									27		
3S-10	A6	25	8.8	28.9(2950)	107.8 (11000)	4000	22-254	0.30	35	42	SQ-170B	2.6(26)
	A8									40		0.6(6)
3S-12	A8	30	10.5	41(4180)	155.8(15900)	3360	22-304	0.73	59	63	SY-150	2.6(26)
3S-15	A8	35	16	82(8360)	248.4 (25350)	3000	50-381	1.95	100	114	SY-200	3.2(32)
	A11									107		

注:红色数据为3SA型的尺寸
The dimensions and the specifications of 3SA type are in the red data.

POWER CHUCK

3S 三爪中实动力卡盘(2)

3-JAW POWER CHUCK(2)

- 高速运转平稳，坚固耐用。
- 重复定位精度高，夹紧力大。
- 适合自动化生产。

- High speed stability, Strong and durable.
- High accuracy of repeat positioning,Clamping force is big.
- Suitable for automatic production.

尺寸图 Size Fig

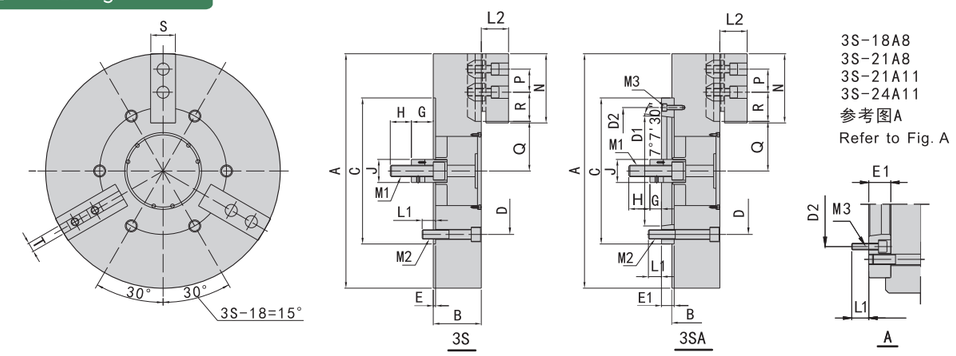

尺寸参数 Dimensions

mm

规格 Spec / 型号 Model		A	B		C (H6)	D	D1	D2	E	E1	G max		G min		H	J
3S-18	A8	450	114	141	300	235	139.72	171.4	6	33	92	59	57	24	55	60
	A11			130			196.87	260		22						
3S-21	A8	530	125	146	380	330.2	139.72	171.4		27	97	70	62	35		
	A11						196.87	235								
	A15						285.78	330.2								
3S-24	A11	610					196.87	235								
	A15						285.78	330.2								
3S-32	A15	800	127	148												
3S-40	A15	1000														

尺寸参数 Dimensions

mm

规格 Spec / 型号 Model		L1		L2	M1	M2	M3	N	P	Q max	Q min	R max	R min	S	T
3S-18	A8	30	29	63	M30	6-M20	6-M16	165	43	108	100	48.8	23.3	62	25.5
	A11		33				3-M10								
3S-21	A8	31	23	74		6-M24	6-M16	180	60	89	81	90.5	24.5	65	25
	A11		28				6-M20								
	A15		34				3-M12								
3S-24	A11		28				6-M20			128	120				
	A15														
3S-32	A15		34				3-M12					189.5			
3S-40	A15											288.5			

性能参数 Specifications

规格 Spec / 型号 Model		楔心行程 Plunger stroke(mm)	爪行程(直径) Jaw stroke (Dia.) mm	许用推拉力 Max.Pull force KN(kgf)	最大夹紧力 Max. Gripping forceKN(kgf)	极限转速 Max. Speed r/min	夹紧范围 Gripping range(mm)	惯量 Moment of inertialKg.m²	重量 Weight kg		适用油缸 Matching cylinder	最大使用压力 Max.pressure MPa(kgf/cm²)
3S-18	A8	35	16	82(8360)	248.4(25350)	2700	60-450	2.47	131	145	SY-200	3.2(32)
	A11									138		
3S-21	A8				272.6(27800)	1900	62-530	4.9	175	196		
	A11									193		
	A15									186		
3S-24	A11					1750	152-610	7.0	216	234		
	A15									227		
3S-32	A15					1100	152-800	36.2	426	440		
3S-40	A15					800	158-1000	98.5	776	790		

注:红色数据为3SA型的尺寸
The dimensions and the specifications of 3SA type are in the red data.

2S 二爪中实动力卡盘

2-JAW POWER CHUCK

- 高速运转平稳，坚固耐用。
- 重复定位精度高，夹紧力大。
- 特别适合异形工件的夹持。

- High speed stability, Strong and durable.
- High accuracy of repeat positioning,Clamping force is big.
- Specially suited for irregular shape.

POWER CHUCK

尺寸图 Size Fig

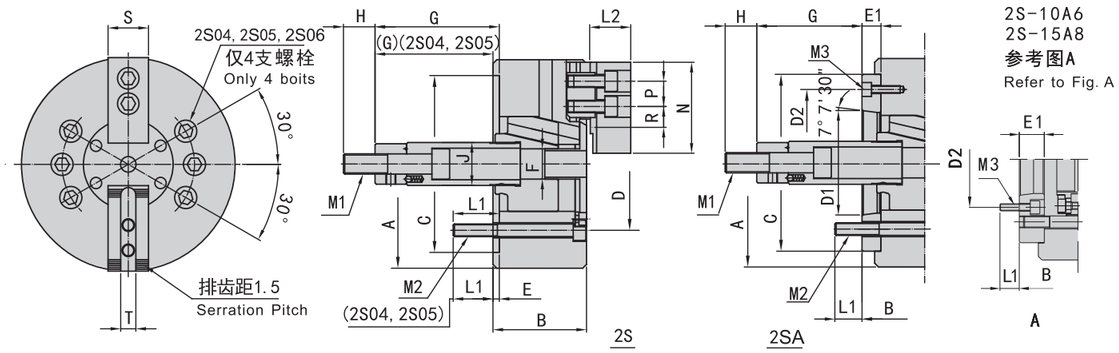

尺寸参数 Dimensions

mm

规格 Spec / 型号 Model		A	B	C (H6)	D	D1	D2	E	E1	F	G max	G min	H	J
2S-04		110	52	60	80	—	—	6	—	—	18	3	25	26
2S-05		135	55	80	100			7			9	-6	35	28
2S-06	A5	165	74	84	140	104.8	116	5	15	21	101.5	86.5	81.5	66.5	34
2S-08	A5	210	85	103	170	133.4	82.56 104.8		23	25	127	104	106	83	38
	A6			97			106.38 150		17			110		89	
2S-10	A6	254	89	109	220	171.4	133.4		25	34	158	133	133	108	45
	A8			102			139.72 190		18			140		115	
2S-12	A8	304	106	118				6			163	145			50
2S-15	A8	381	114	141	300	235	171.4		33	—	104	71	69	36	55	60
	A11			130			196.87 260		22			82		47												

尺寸参数 Dimensions

mm

规格 Spec / 型号 Model		L1		L2	M1	M2	M3	N	P	R max	R min	S	T
2S-04		12		25	M10X1.5	4-M8	—	52	14	11.3	8.3	25	10
2S-05		14		32	M12X1.75			62		13.5	6		
2S-06	A5	14	14	39	M16X2	4-M10	4-M6	73	20	18	7.5	31	12
2S-08	A5	20	17	41	M20X2.5	6-M12	6-M10	95	25	22.3	11.8	35	14
	A6		18				4-M6						
2S-10	A6	18		46		6-M16	6-M12	110	30	30.8	11.3	40	16
	A8		25				4-M8						
2S-12	A8	22		54				130	30	48.8	12.3	50	18
2S-15	A8	30	29	63	M30X3.5	6-M20	6-M16	165	43	48.8	23.3	62	25.5
	A11		33				4-M10						

性能参数 Specifications

规格 Spec / 型号 Model		楔心行程 Piunger stroke(mm)	爪行程(直径) Jaw stroke (Dia.)mm	许用推拉力 Max.Pull force KN(kgf)	最大夹紧力 Max. Gripping forceKN(kgf)	极限转速 Max. Speed r/min	夹紧范围 Gripping range(mm)	惯量 Moment of inertialKg.m²	重量 Weight kg		适用油缸 Matching cylinder	最大使用压力 Max.pressure MPa(kgf/cm²)
2S-04		15	6.9	5.3(540)	14.7(1500)	6000	5-110	0.01	4.1		SY-65	1.9(19)
2S-05					16.7(1700)	5500	14-135	0.02	6.2		SQ-130	0.6(6)
2S-06	A5	20	9.2	12(1220)	35(3570)	5250	14-165	0.05	13	14	SY-100	1.7(17)
2S-08	A5	21	9.7	16.5(1680)	50(5100)	4750	17-210	0.14	24	28	SY-125	1.5(15)
	A6									27		
2S-10	A6	25	8.8	19.4(1980)	71.5 (7300)	4000	22-254	0.30	35	42	SQ-170B	1.8(18)
	A8									40		0.6(6)
2S-12	A8	30	10.5	27.4(2800)	103.9(10600)	3360	22-304	0.73	59	63	SY-150	1.8(18)
2S-15	A8	35	16	54.9(5600)	164.6 (16800)	3000	50-381	1.95	100	114	SY-200	1.9(19)
	A11									107		

注:红色数据为2SA型的尺寸
The dimensions and the specifications of 2SA type are in the red data.

4S 四爪中实动力卡盘

4-JAW POWER CHUCK

- 高速运转平稳，坚固耐用。
- 重复定位精度高，夹紧力大。
- 特别适合异形工件的夹持。

- High speed stability, Strong and durable.
- High accuracy of repeat positioning,Clamping force is big.
- Specially suited for irregular shape.

POWER CHUCK

尺寸图 Size Fig

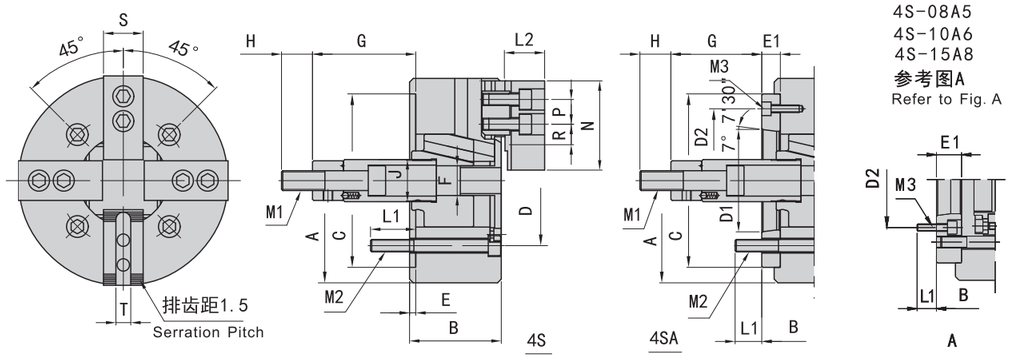

尺寸参数 Dimensions

mm

规格 Spec / 型号 Model		A	B	C (H6)	D	D1	D2	E	E1	F	G max	G min	H	J
4S-06	A5	165	74	84	140	104.8	116	5	15	21	101.5	86.5	81.5	66.5	34
4S-08	A5	210	85	103	170	133.4	82.56 104.8		23	25	127	104	106	83	38
	A6			97			106.38 150		17			110		89	
4S-10	A6	254	89	109	220	171.4	133.4		25	34	158	133	133	108	45
	A8			102			139.72 190		18			140		115	
4S-12	A8	304	106	118				6			163	145			50
4S-15	A8	381	114	141	300	235	171.4		33	—	104	71	69	36	55	60
	A11			130			196.87 260		22			82		47												

尺寸参数 Dimensions

mm

规格 Spec / 型号 Model		L1		L2	M1	M2	M3	N	P	R max	R min	S	T
4S-06	A5	14	14	39	M16X2	4-M10	4-M6	73	20	18	7.5	31	12
4S-08	A5	20	17	41	M20X2.5	4-M12	6-M10	95	25	22.3	11.8	35	14
	A6		18				4-M6						
4S-10	A6	18		46		4-M16	6-M12	110	30	30.8	11.3	40	16
	A8		25				4-M8						
4S-12	A8	22		54				130	30	48.8	12.3	50	18
4S-15	A8	30	29	63	M30X3.5	4-M20	6-M16	165	43	48.8	23.3	62	25.5
	A11		33				4-M10						

性能参数 Specifications

规格 Spec / 型号 Model		楔心行程 Piunger stroke(mm)	爪行程(直径) Jaw stroke (Dia.)mm	许用推拉力 Max.Pull force KN(kgf)	最大夹紧力 Max. Gripping forceKN(kgf)	极限转速 Max. Speed r/min	夹紧范围 Gripping range(mm)	惯量 Moment of inertialKg.m²	重量 Weight kg		适用油缸 Matching cylinder	最大使用压力 Max.pressure MPa(kgf/cm²)
4S-06	A5	20	9.2	17.9(1830)	52.4(5350)	5250	14-165	0.05	13	14	SY-100	2.5(25)
4S-08	A5	21	9.7	25(2550)	74.5(7600)	4750	17-210	0.14	24	28	SY-125	2.3(23)
	A6									27		
4S-10	A6	25	8.8	28.9(2950)	107.8 (11000)	4000	22-254	0.30	35	42	SQ-170B	2.6(26)
	A8									40		0.6(6)
4S-12	A8	30	10.5	41(4180)	155.8(15900)	3360	22-304	0.73	59	63	SY-150	2.6(26)
4S-15	A8	35	16	82(8360)	248.4 (25350)	3000	50-381	1.95	100	114	SY-200	3.2(32)
	A11									107		

注:红色数据为4SA型的尺寸
The dimensions and the specifications of 4SA type are in the red data.

POWER CHUCK

3SL 三爪防水防尘动力卡盘

3-JAW WATERPROOF AND DUSTPROOF POWER CHUCK

- 防水及防尘设计，特别适合立式车床使用。
- Sealed against swarf, chips and coolant,
- suitable for vertical lathe.

尺寸图 Size Fig

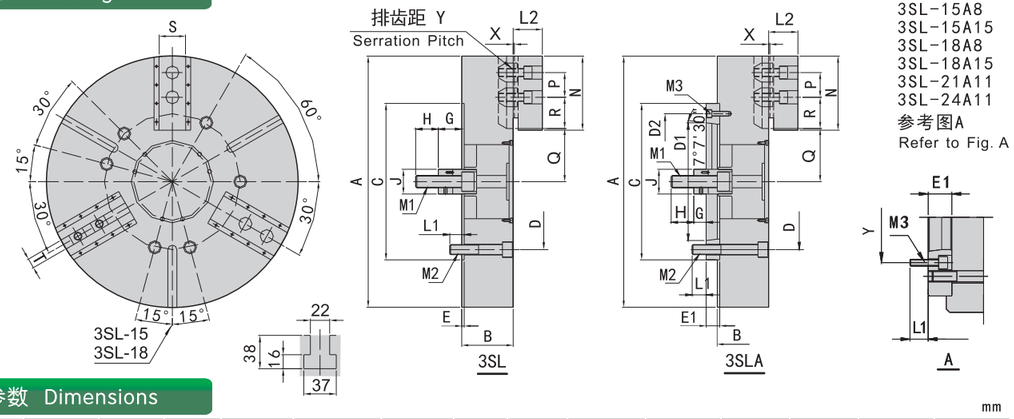

尺寸参数 Dimensions

mm

规格 Spec / 型号 Model		A	B	C (H6)	D	D1	D2	E	E1	G max	G min	H	J	L1	L2
3SL-15	A8	381	116	300	235	139.719	171.4	6	54	68	33	55	60	24	63
	A11					196.869	260		58	64	29			32	
	A15					285.775	330.2		62	60	25			26	
3SL-18	A8	450				139.719	171.4		54	68	33			24	
	A11					196.869	260		58	64	29			32	
	A15					285.775	330.2		62	60	25			26	
3SL-21	A11	530	127	380	330.2	196.869	235		46					34	71
	A15					285.775	330.2								
3SL-24	A11	610				196.869	235								
	A15					285.775	330.2								
3SL-32	A15	800								78	43			33	75
3SL-40	A20	1005	184	520	463.6	412.775	463.6	8	50	34	-26	65		35	110
3SL-50	A20	1250												33	

尺寸参数 Dimensions

mm

规格 Spec / 型号 Model		M1	M2	M3	N	P	Q max	Q min	R max	R min	S	T	X	Y
3SL-15	A8	M30	6-M20	6-M16	165	43	77.5	69.5	50.25	23.25	62	25.5	2	1.5
	A11			3-M10										
	A15			6-M24										
3SL-18	A8			6-M16			108	100	49.5	25.5				
	A11			3-M10										
	A15			6-M24										
3SL-21	A11		6-M24	6-M20	180	60	86	78	93.5	27.5			3	3.0
	A15			3-M12										
3SL-24	A11			6-M20			125	117						
	A15			3-M12										
3SL-32	A15						119.5	111.5	197.8	41.8	75			
3SL-40	A20	M36			200	100	149.5	132.5	215	48	85	30	-4	-
3SL-50	A20								337.5					

性能参数 Specifications

规格 Spec / 型号 Model		楔心行程 Piunger stroke(mm)	爪行程(直径) Jaw stroke (Dia.) mm	许用推拉力 Max.Pull force KN(kgf)	最大夹紧力 Max. Gripping forceKN(kgf)	极限转速 Max. Speed r/min	夹紧范围 Gripping range(mm)	惯量 Moment of inertialKg.m²	重量 Weight kg		适用油缸 Matching cylinder	最大使用压力 Max. pressure MPa(kgf/cm²)
3SL-15	A8	35	16	81(8260)	248(25290)	2800	68-381	2.3	100	115	SY-200	3.2(32)
	A11									107		
	A15							2.7		106		
3SL-18	A8					2500	85-450	3.3	134	148		
	A11									141		
	A15							3.7		140		
3SL-21	A11			82(8360)	273(27838)	1940	110-530	5.3	190	208		
	A15							5.2		201		
3SL-24	A11					1760	155-610	7.6	234	252		
	A15							7.3		245		
3SL-32	A15			85(8650)	265(27000)	1100	265-800	36.2	430	444	SY-250	4.0(40)
3SL-40	A20	60	32	180(18356)	300(30593)	800	265-1005	72	744	813		
3SL-50	A20					630	265-1250	148	940	1009		

注:红色数据为3SLA型的尺寸
The dimensions and the specifications of 3SLA type are in the red data.

3SC 三爪长行程中实动力卡盘

3-JAW EXTRA LONG JAW STROKE POWER CHUCK

- 三爪超长爪行程。
- 可解决越过大直径夹持。
- 高刚性结构及高夹持精度。
- It's a 3-jaw extra long jaw stroke
- It can Skip the big diameter clamping
- Construction of High rigidity and high clamping accuracy.

尺寸图 Size Fig

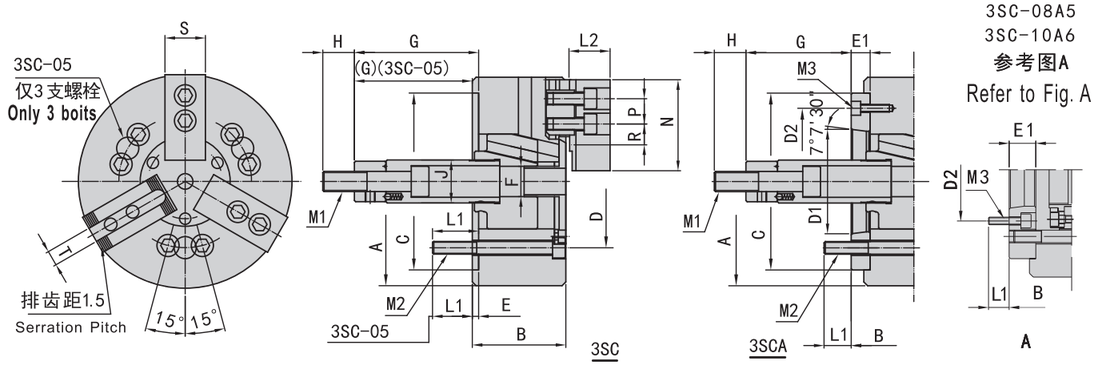

尺寸参数 Dimensions

mm

规格 Spec / 型号 Model		A	B		C (H6)	D	D1	D2	E	E1	F	G max		G min		H	J
3SC-05		135	55		80	100	—	—	7	—	—	9		-6		35	28
3SC-06	A5	165	74	84	140	104.8	82.56	116	5	15	22	101.5	86.5	81.5	66.5	36	34
3SC-08	A5	210	85	103	170	133.4		104.8		23	24	127	104	104	81		
	A6			97			106.38	150		17			110		87		
3SC-10	A6	254	89	109	220	171.4		133.4		25	32	160	133	133	106		38
	A8			102			139.72	190		18			142		115		45
3SC-12	A8	304	106	118					6			163	145				

尺寸参数 Dimensions

mm

规格 Spec / 型号 Model		L1		L2	M1	M2	M3	N	P	R max	R min	S	T
3SC-05		14		32	M12X1.75	3-M8	—	62	14	13.5	6	25	10
3SC-06	A5	14	14	39	M16X2	6-M10	3-M6	73	20	18	7.5	31	12
3SC-08	A5	20	17	41	M20X2.5	6-M12	6-M10	95	25	22.3	11.8	35	14
	A6		18				3-M6						
3SC-10	A6	18		46		6-M16	6-M12	110	30	30.8	11.3	40	16
	A8		25				3-M8						
3SC-12	A8	22		54				130	30	48.8	12.3	50	18

性能参数 Specifications

规格 Spec / 型号 Model		楔心行程 Piunger stroke(mm)	爪行程(直径) Jaw stroke (Dia.) mm	许用推拉力 Max.Pull force KN(kgf)	最大夹紧力 Max. Gripping forceKN(kgf)	极限转速 Max. Speed r/min	夹紧范围 Gripping range(mm)	惯量 Moment of inertialKg.m²	重量 Weight kg		适用油缸 Matching cylinder	最大使用压力 Max. pressure MPa(kgf/cm²)
3SC-05		15	10.9	9.8(1000)	16.4(2550)	4500	14-135	0.02	6.2		SY-80	2.3(23)
3SC-06	A5	20	14.5	21.6(2200)	36(3680)	4000	14-165	0.05	13	14	SY-100	3.0(30)
3SC-08	A5	23	16.7	29.4(3000)	54.9(5600)	3500	17-210	0.14	24	28	SY-125	2.9(29)
	A6									27		
3SC-10	A6	27	19.6	39.2(4000)	74(7550)	3000	22-254	0.30	35	42	SY-150	2.8(28)
	A8									40		
3SC-12	A8	30	21.8	54(5500)	99(10100)	2500	26-304	0.73	59	63		3.6(36)

注:红色数据为3SCA型的尺寸
The dimensions and the specifications of 3SCA type are in the red data.

2SC 二爪长行程中实动力卡盘

2-JAW EXTRA LONG JAW STROKE POWER CHUCK

- 二爪超长爪行程。
- 可解决越过大直径夹持。
- 高刚性结构及高夹持精度。

- It's a 2-jaw extra long jaw stroke
- It can Skip the big diameter clamping
- Construction of High rigidity and high clamping accuracy.

尺寸图 Size Fig

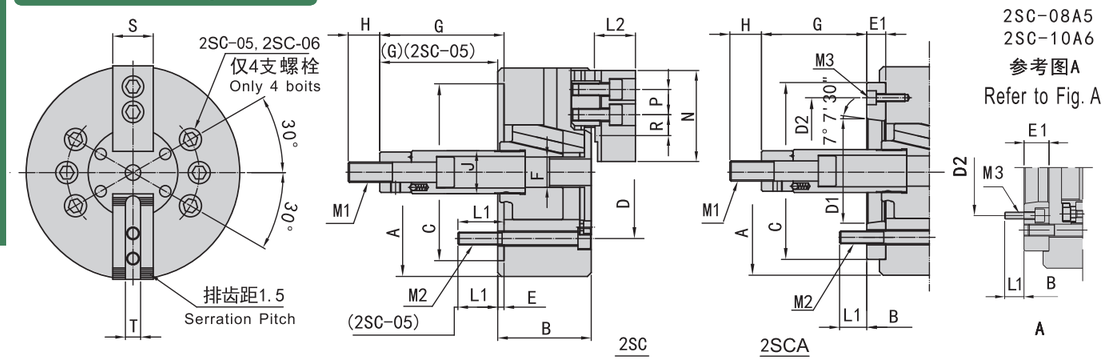

尺寸参数 Dimensions

mm

规格 Spec / 型号 Model		A	B	C (H6)	D	D1	D2	E	E1	F	G max	G min	H	J
2SC-05		135	55	80	100	—	—	7	—	—	9	-6	35	28
2SC-06	A5	165	74	84	140	104.8	82.56	116	5	15	21	101.5	86.5	81.5	66.5	36	34
2SC-08	A5	210	85	103	170	133.4	106.38	104.8		23	25	127	104	104	81		38
	A6			97				150		17			110		87		
2SC-10	A6	254	89	109	220	171.4		133.4		25	34	160	133	133	106		45
	A8			102			139.72	190		18			142		115		
2SC-12	A8	304	106	118					6			163	145				50

尺寸参数 Dimensions

mm

规格 Spec / 型号 Model		L1		L2	M1	M2	M3	N	P	R max	R min	S	T
2SC-05		14		32	M12X1.75	3-M8	—	62	14	13.5	6	25	10
2SC-06	A5	14	14	39	M16X2	4-M10	4-M6	73	20	18	7.5	31	12
2SC-08	A5	20	17	41	M20X2.5	6-M12	6-M10	95	25	22.3	11.8	35	14
	A6		18				4-M6						
2SC-10	A6	18		46		6-M16	6-M12	110	30	30.8	11.3	40	16
	A8		25				4-M8						
2SC-12	A8	22		54				130	30	48.8	12.3	50	18

性能参数 Specifications

规格 Spec / 型号 Model		楔心行程 Piunger stroke(mm)	爪行程(直径) Jaw stroke (Dia.) mm	许用推拉力 Max.Pull force KN(kgf)	最大夹紧力 Max. Gripping forceKN(kgf)	极限转速 Max. Speed r/min	夹紧范围 Gripping range(mm)	惯量 Moment of inertialKg.m²	重量 Weight kg		适用油缸 Matching cylinder	最大使用压力 Max.pressure MPa(kgf/cm²)
2SC-05		15	10.9	6.5(660)	11(1120)	4500	14-135	0.02	6.2		SY-80	1.6(16)
2SC-06	A5	20	14.5	14.3(1460)	24(2450)	4000	14-165	0.05	13	14	SY-100	2.0(20)
2SC-08	A5	23	16.7	19.6(2000)	36.6(3730)	3500	17-210	0.14	24	28	SY-125	1.9(19)
	A6									27		
2SC-10	A6	27	19.6	26.1(2660)	49.3(5030)	3000	22-254	0.30	35	42	SY-150	1.9(19)
	A8									40		
2SC-12	A8	30	21.8	36(3670)	66(6730)	2500	26-304	0.73	59	63		2.4(24)

注:红色数据为2SCA型的尺寸
The dimensions and the specifications of 2SCA type are in the red data.

4SK 四爪双动型动力卡盘

4-JAW TWO MOTION TYPE POWER CHUCK

- 两组卡爪各自动作结构。
- 超长的爪行程可确保夹持范围。
- 特别适合方形或非规则形工件的夹持。

- The two groups of card claws each movement structure
- Super long claw can ensure the clamping range
- The 4SK series is suitable for square bar and other nonuniform shaped workpieces

尺寸图 Size Fig

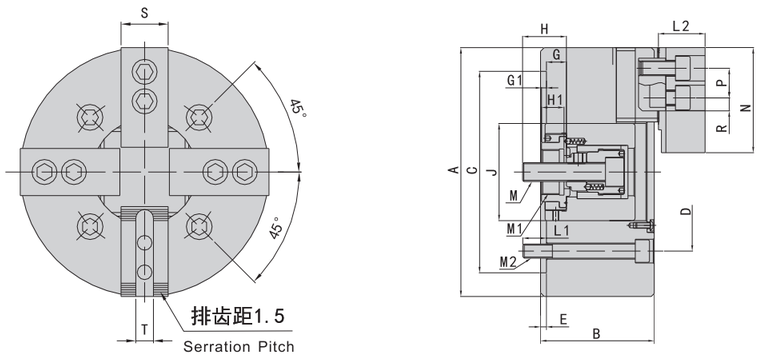

尺寸参数 Dimensions

mm

规格 Spec / 型号 Model	A	B	C (H6)	D	E	G max	G min	G1 max	G1 min	H	H1	J
4SK-08	210	91	170	133.4	5	32	15	4	-13	29	20	66
4SK-10	254	110	220	171.4	5	36.5	16.5	10	-10	36	23	90
4SK-12	304											

尺寸参数 Dimensions

mm

规格 Spec / 型号 Model	L1	L2	M	M1	M2	N	P	R max	R min	S	T
4SK-08	20	38	M14X2	M34X1.5	4-M12	95	25	25.3	13.3	35	14
4SK-10	25	43	M16X2	M45X1.5	4-M16	110	30	32.3	12.8	40	16
4SK-12								56.8	13.3		

性能参数 Specifications

规格 Spec / 型号 Model	楔心行程 Piunger stroke(mm)	爪行程(直径) Jaw stroke (Dia.) mm	许用推拉力 Max.Pull force KN(kgf)	最大夹紧力 Max. Gripping forceKN(kgf)	极限转速 Max. Speed r/min	夹紧范围 Gripping range(mm)	惯量 Moment of inertialKg.m²	重量 Weight kg	适用油缸 Matching cylinder	最大使用压力 Max.pressure MPa(kgf/cm²)
4SK-08	17	13.6	16(1630)	54.3(5540)	3000	24-210	0.15	23	SY-120B	1.7(17)
4SK-10	20	16	21.6(2200)	79.4(8100)	2100	50-254	0.35	44.5	SY-125B	2.2(22)
4SK-12					1500	50-304	0.65	57.5		

1SC 单爪长行程动力卡盘

SINGLE JAW EXTRA LONG JAW STROKE POWER CHUCK

- 单边固定爪设计，超长爪行程。
- 适合于夹具的夹持。
- 只需更换固定爪就可更换夹具。

- Unilateral fixed claw design, super long claw travel
- Suitable for clamping the jig
- You can replace the fixture with a fixed claw

POWER CHUCK

尺寸图 Size Fig

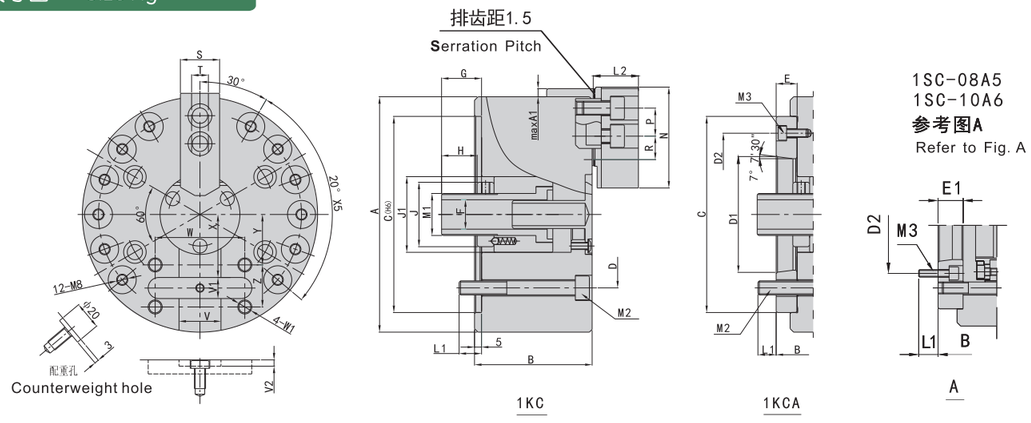

尺寸参数 Dimensions

mm

规格 Spec 型号 Model		A	A1	B		C (H6)	D	D1	D2	E	F	G max	G min	H	J	J1	L1		L2	M1
1SC-06	A5	165	9.5	80	90	140	104.8	82.56	116	15	21	37	17	25	46	54	16	16	37	M30X1.5
1SC-08	A5	210	8	93	111	170	133.4		104.8	23		46	21	32	52	70	21	19	38	M33X1.5
	A6				105			106.38	150	17								20		
1SC-10	A6	254	13.5	108	128	220	171.4		133.4	25	34	47	17	30	62	90	25		43	M45X1.5
	A8				121			139.72	190	18								27		

尺寸参数 Dimensions

mm

规格 Spec 型号 Model		M2	M3	N	P	R max	R min	S	T	V (H6)	V1 (h9)	V2	W	W1	X	Y	Z
1SC-06	A5	4-M10	3-M6	73	20	19.8	7.8	31	12	30	15	4.5	64	M10	45	36	30
1SC-08	A5	4-M12	6-M10	95	25	25.3	10.3	35	14	35	18		70	M12	61	52	36
	A6		3-M6														
1SC-10	A6	4-M16	6-M12	110	30	33.8	11.3	40	16	40	20	5	90		71	58.5	45
	A8		3-M8														

性能参数 Specifications

规格 Spec 型号 Model		楔心行程 Piunger stroke(mm)	爪行程(直径) Jaw stroke (Dia.) mm	许用推拉力 Max.Pull force KN(kgf)	最大夹紧力 Max. Gripping forceKN(kgf)	极限转速 Max. Speed r/min	夹紧范围 Gripping range(mm)	惯量 Moment of inertiaIKg.m²	重量 Weight kg		适用油缸 Matching cylinder	最大使用压力 Max. pressure MPa(kgf/cm²)
1SC-06	A5	20	16	12.3(1250)	27.3(2780)	3800	17-168	0.05	13	14.5	SY-100	1.7(17)
1SC-08	A5	25	20	15.7(1600)	37.2(3800)	3000	20-215	0.15	24.5	27.5	SY-125	1.5(15)
	A6									25.5		
1SC-10	A6	30	24	21.6(2200)	48.5(4950)	2400	25-254	0.28	34	41		1.9(19)
	A8									40		

注:红色数据为1SCA型的尺寸
The dimensions and the specifications of 1SCA type are in the red data.

CL 筒夹夹头

COLLET CHUCK

- 精密筒夹夹头，适用于各种旋削机械及数控车床。
- 高精度、高转速及高刚性。
- 安装方式与中空卡盘相同，可相容互换。

- Precision collet chuck,Suitable for all kinds of turning machines and CNC lathe.
- High Clamping accuracy ,high speed and construction of high rigidity.
- The installation is the same as “Thru-hole power chuck”and they are replaceable with each other.

COLLET CHUCK

尺寸图 Size Fig

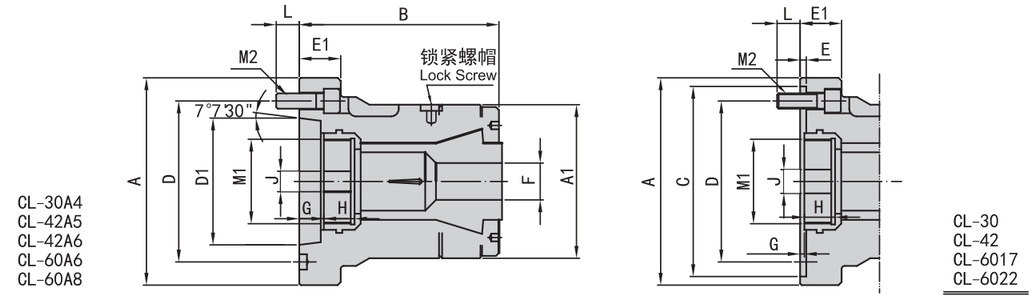

尺寸参数 Dimensions

mm

规格 Spec 型号 Model	A	A1	B	C (H6)	D	D1	E	E1	F max	F min	G max	G min	H	J	L	M1	M2
CL-30	120	85	100	110	82.6	—	4	23	30	3	7	2.5	15	12	16	M40X1.5	3-M10X25
CL-30A4	110		108	—		63.51	5	25			9.5	5			15		3-M10X30
CL-42	155	100	120	140	104.8	—		23	42		7	1	17.5	20	18	M55X2	3-M10X25
CL-42A5	135		130	—		82.56		27			14	8			14		4-M10X30
CL-42A6	165				133.4	106.38		32							16	M60X2	4-M12X30
CL-6017	185	130	145.5	170		—		27	60	5	9	3	24	45	20	M75X2	6-M12X30
CL-6022	234		142	220	171.5			32			13	7				M85X2	6-M16X30
CL-60A6	170		154	—	133.4	106.38		27			10.5	4.5				M75X2	4-M12X35
CL-60A8	210		147.5		171.5	139.72		35			3.5	-2.5			22	M85X2	4-M16X40

性能参数 Specifications

规格 Spec 型号 Model	最大夹持能力(F) Max.Chucking Capacity(mm) 圆棒 Round	六角料 Hexagon	方料 Square	许用推拉力 Max.Pull force KN(kgf)	最大夹紧力 Max. Gripping forceKN(kgf)	极限转速 Max. Speed r/min	惯量 Moment of inertiaIKg.m²	重量 Weight kg	使用筒夹 Matching Stell Collet	适用油缸 Matching cylinder	最大使用压力 Max. pressure MPa(kgf/cm²)
CL-30	3-30	4-26	4-20	19.6	42.1	8000	0.037	4.2	161E	KY-536T	3.0(30)
CL-30A4				(2000)	(4300)		0.038	4.1			
CL-42	3-42	6-36	6-29	24.5	52.9	6000	0.06	6.9	173E	KY-646T	2.9(29)
CL-42A5							0.057	6.1			
CL-42A6				(2500)	(5400)		0.061	7.5			
CL-6017	5-60	8-52	7-42	29.4	63.7	5000	0.098	14.1	185E	KY-1068T	1.8(18)
CL-6022							0.126	16.3			
CL-60A6				(3000)	(6500)		0.091	13.5			
CL-60A8							0.104	14.5			

注：配用弹性夹头须符合DIN6343规范。
The collet used must accord with DIN 6343.

HT 后拉式筒夹夹头

PULL TYPE COLLET CHUCK

- 后拉式筒夹夹头，适用于各种旋削机械及数控车床。
- 高精度、高转速及高刚性。
- 安装方式与中空卡盘相同，可相容互换。

- Pull type collet chuck,Suitable for all kinds of turning machines and CNC lathe .
- High Clamping accuracy ,high speed and construction of high rigidity.
- The installation is the same as “Thru-hole power chuck”and they are replaceable with each

尺寸图 Size Fig

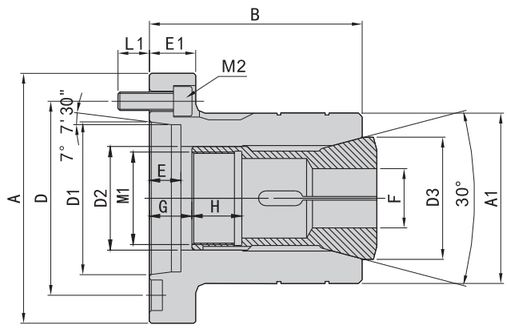

HT-26A4
HT-35A4
HT-42A5
HT-42A6
HT-52A5
HT-52A6

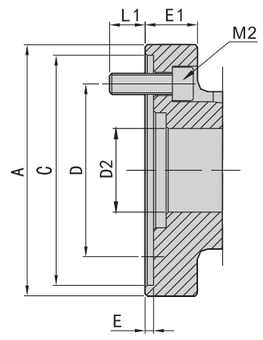

HT-26
HT-35
HT-42
HT-52

尺寸参数 Dimensions

mm

规格 Spec / 型号 Model	A	A1	B	C (H6)	D	D1	D2 (H6)	D3	E	E1	G max	G min	H	L1	M1	M2
HT-26	120	75	110	110	82.6	—	40	48	4	25	23	18.5	27	17	M33X1.5	3-M10X25
HT-26A4	112			—		63.51			17							3-M10X30
HT-35	120	85		110		—	49	58	4						M42X1.5	3-M10X25
HT-35A4	112			—		63.51			17							3-M10X30
HT-42	155	92	115	140	104.8	—	56	65	5						M50X2	4-M10X25
HT-42A5	135			—		82.56			17							4-M10X30
HT-42A6	165				133.4	106.38				30						4-M12X30
HT-52	155			140	104.8	—	65	73	5	25					M55X2	4-M10X25
HT-52A5	135			—		82.56			17							4-M10X30
HT-52A6	165				133.4	106.38				30						4-M12X30

性能参数 Specifications

规格 Spec / 型号 Model	最大夹持能力(F) Max.Chucking Capacity(mm) 圆棒 Round	六角料 Hexagon	方料 Square	许用推拉力 Max.Pull force KN(kgf)	最大夹紧力 Max. Gripping forceKN(kgf)	极限转速 Max. Speed r/min	惯量 Moment of inertialKg.m²	重量 Weight kg	使用筒夹 Matching Stell Collet	适用油缸 Matching cylinder	最大使用压力 Max.pressure MPa(kgf/cm²)
HT-26	3-26	4-22	4-18	18(1840)	39(3980)	7000	0.037	4.2	B26	KY-428T	2.6(26)
HT-26A4								4.1			
HT-35	3-35	6-32	6-26	20(2040)	44(4480)	6000	0.057	6.5	B35	KY-536T	2.4(24)
HT-35A4								6.1			
HT-42	3-42	6-36	6-29	25(2550)	55(5600)		0.061	6.9	B42	KY-646T	2.9(29)
HT-42A5								6.1			
HT-42A6								7.5			
HT-52	5-52	8-45	7-36	28(2860)	61(6220)	5500	0.093	14.3	B52	KY-852T	2.4(24)
HT-52A5								14			
HT-52A6								13.8			

3BD 杠杆式补偿型动力卡盘

PULL COMPENSATING POWER CHUCK

- 轴类加工专用夹具，卡爪对工件具有后拉和补偿式夹紧的功能，(该卡盘夹持力提供加工时的扭矩和后拉力)；对中心的补偿量为5mm。
- 在以轴心为基准(顶尖定位)、要求与轴有同轴度时使用。
- 使用法兰连接，安装方便。

- Spindle type machining fixture,the card claw has the function of post-pull and compensating clamp on the workpiece,（The chuck holds the torque and rear pullof the processing) For jaw compensation to the cener,thestandardis Φ5mm and available for up to Φ10mm.
- Based on the center of the axis,(Two thimbles) The center of the axis is the same as the axis of the axis,You can use.
- Use chuck adaptor, Easy

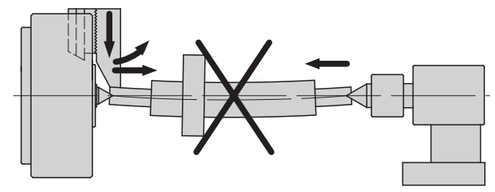

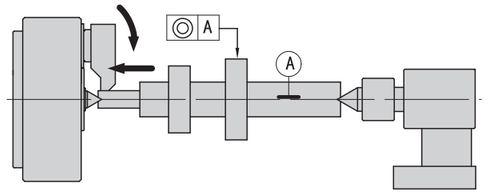

无后拉和补偿的卡盘夹紧工件时，卡爪翘起，把轴推离中心定位，如尾座的力不能克服这个翘起的力，则会导致工件的弯曲。

The workpiece is clamperd without back pull and compensation, The jaw is up, pushing the shaft from the center, If the force of the tail can’t overcome this lifting force,It will cause the workpiece to bend.

尾座只需支撑工件的力，卡盘把工件拉向中心顶尖，工件不发生弯曲，加工出来的轴同轴度非常好；当轴的外径与中心孔不同轴时，卡爪的补偿作用就凸显出来了。

The rear seat only needs the force to support the workpiece,The card disc pulls the workpiece to the canter of the cencer,The workpiece does not bend,The overlap of the shaft is verygood;when the outer diameter of the shaft does not overlap with the center hole,The compensation of the claw is highlighted.

尺寸图 Size Fig

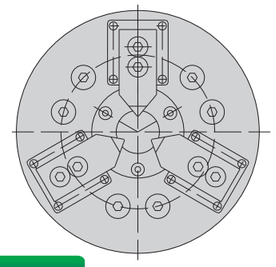

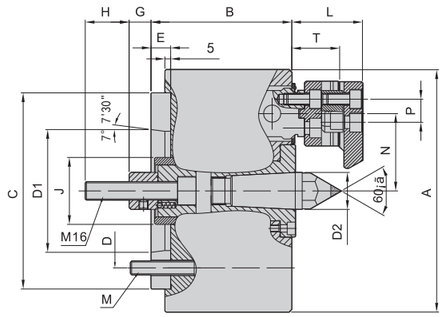

尺寸参数 Dimensions

mm

规格 Spec / 型号 Model	A	B	C (H6)	D	D1	D2	E	G	H	J	L	M	N	P	T
3BD-06A5	168	116	140	104.8	82.56	24	15	4-20	38	50	52	M10×120	55	14	34
3BD-08A6	210	127	170	133.4	106.38	32	17	9-29	38	58	61	M12×125	67	20	41.5

性能参数 Specifications

规格 Spec / 型号 Model	楔心行程 Piunger stroke(mm)	爪行程(直径) Jaw stroke (Dia.) mm	许用推拉力 Max.Pull force KN(kgf)	最大夹紧力 Max. Gripping forceKN(kgf)	极限转速 Max. Speed r/min	夹紧范围 Gripping range(mm)	补偿量h Corrected the amount mm (Dia.)	惯量 Moment of inertialKg.m²	重量 Weight kg	适用油缸 Matching cylinder	最大使用压力 Max.pressure MPa(kgf/cm²)
3BD-06A5	16	13	14.7(1500)	25.0(2550)	3500	6-35	5	0.2	13	SY-100	2.1(21)
3BD-08A6	20	18	19.6(2000)	34.3(3500)	3000	16-65	6	0.5	22	SY-100	2.8(28)

注：3BT-06型为弹性顶尖型,夹工件时，以中心为基准补正，同时可使工件接触到端面，便于轴向定位。

3BT-06Type Use either spring center,when clamping the workpiece,it is based on the center,
The workpiece can also be pulled to the position plane,For easy axial position confirmation.

3KQ 三爪前置式大孔径气动卡盘

3-JAW LARGE APERTURE PNEUMATIC CHUCK WITH FRONT-END CYLINDER

- 气缸与卡盘一体式设计，安装方便。
- 通常在机床前后各配一台同时使用。
- 主要适用于焊接设备及管子加工机床。

- Combination design of cylinder and chuck,Easy installation.
- Each machine is usually equipped withone before and after the machine.
- Mainly applicable to welding equipmentand pipe processing, machine tools.

尺寸图 Size Fig

- 注意事项:
  卡盘夹紧或松开操作时,配气环上的两个特制密封圈箍紧缸体外圆,所以卡盘的松开和夹紧必须在机床主轴停止旋转时进行。
- CAUTION:
  When clamping and releasing the chuck, the two special sealing rings on the valve ring block the cylinder outer circle. Therefore, the loosening and clamping operations of the chuck must be carried out when the spindle of the machine stops rotating.

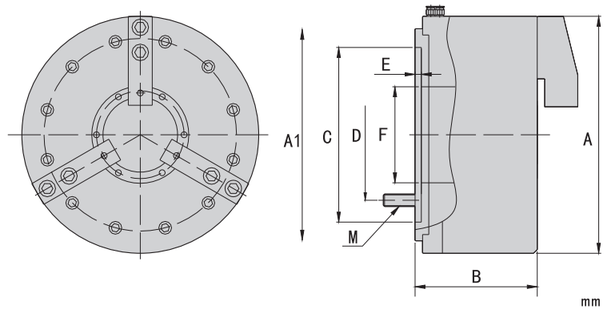

尺寸参数 Dimensions

规格 Spec 型号 Model	A	A1	B	C (H6)	D	E	F	M
3KQ-350	380	315	192	235	275	7	115	6-M12
3KQ-400S	467	400	194	310	374	8	152	9-M12
3KQ-400			223				150	
3KQ-460			238				181	
3KQ-500	510		313(338)	325(300)	360(330)	10.5	205	12-M16
3KQ-570	570	500	280	415	474	8		12-M12
3KQ-570A							230	
3KQ-600	605	535		450	508		280	
3KQ-630	685	610	305.5	510	580		325	
3KQ-730	730	658	301.5	560	630	10.5	355	12-M16
3KQ-850	850	775	352	700	745	8	375	
3KQ-900	900						440	
3KQ-1000	1000	850	330		815	10	560	
3KQ-1150	1150	1060	352	800	1000		660	

性能参数 Specifications

规格 Spec 型号 Model	单爪行程 Single jaw stroke mm	夹紧力(气压0.5MPa时) Gripping force(Air0.5MPa) KN(kgf)	极限转速 Max.Speed r/min	惯量 Moment of inertial Kg.m²	重量 Weight kg	使用压力 Pressure MPa(kgf/cm²)
3KQ-350	13+7	62(6326)	3000	1.62	110	0.2-1(2-10)
3KQ-400S	7	130(13265)	1700	5.6	154	
3KQ-400	13+7		1300	6.5	200	
3KQ-460		110(11220)		9.8	190	
3KQ-500	17+7	140(14286)		15.5	298	
3KQ-570	17+8.5	160(16326)		16.4	340	
3KQ-570A		140(14286)		16.1	325	
3KQ-600		160(16326)	1100	19	360	
3KQ-630		180(18367)	900	28	520	
3KQ-730	15+10	190(19388)	800	44.2	583	
3KQ-850	13.4+12	200(20408)	750	71.2	970	0.3-1(3-10)
3KQ-900		190(19388)	700	105	980	
3KQ-1000	15+10.4	170(17347)	450	150	960	
3KQ-1150		230(23470)	400	194	1890	

注：1.单爪行程=快速行程+夹紧行程，快速行程不能用于夹紧。 2.在气路中应配置减压阀、气液分离器、油雾器等气动元件，以提高卡盘寿命。
3.卡盘的换向阀应选用中位泄压式三位五通双气控制阀，只有在泄压状态下才能旋转工作。
1.Single stroke = fast stroke + clamping stroke, fast stroke can not be used for clamping
2.Pneumatic components such as pressure reducing valve, gas-liquid separator and oil sprayer shall be equipped in the gas path to improve the life of the chuck.
3.The valve should be a relief chuck three position five way double control valve selection, only in the state of pressure relief to work

3SQ 三爪前置式气动卡盘

3-JAW PNEUMATIC CHUCK WITH FRONT-END CYLINDER

- 气缸与卡盘一体式设计，安装方便。
- 高速运转平稳
- 重复定位精度高，夹紧力大，适合自动化生产。

- Combination design of cylinder and chuck,Easy installation.
- High speed stability.
- High accuracy of repeat positioning,Clamping force is big, Suitable for automatic production.

尺寸图 Size Fig

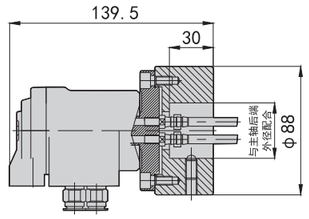

气压回转器
AIR ROTARY VALVE

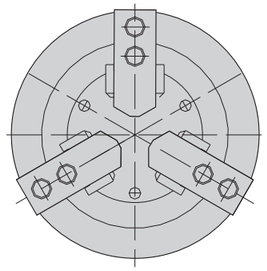

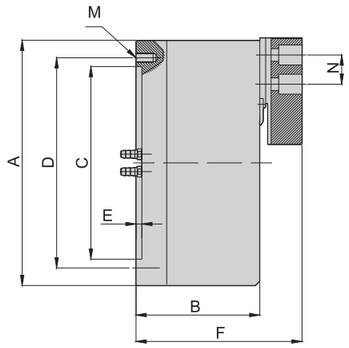

尺寸参数 Dimensions

mm

规格 Spec 型号 Model	A	B	C (H6)	D	E	F	N	M
3SQ-06	168	97	130	142	5	138	20	3-M8
3SQ-08	210	106	165	180	5	148	25	3-M10

性能参数 Specifications

规格 Spec 型号 Model	爪行程(直径) Jaw stroke(Dia.) mm	最大夹紧力 Max. Gripping force KN(kgf)	极限转速 Max.Speed r/min	夹紧范围 Gripping range mm	惯量 Moment of inertial Kg.m²	重量 Weight kg	使用压力 Pressure MPa(kgf/cm²)
3SQ-06	3.25	37.8(3850)	4000	14-165	0.05	14	0.4-0.8(4-8)
3SQ-08	4	63.6(6490)	3500	17-210	0.14	24	0.4-0.8(4-8)

3XM 三爪斜拉式气密动力卡盘

3-JAW CLINED PULL AIR-TIGHT POWER CHUCK

- 可同时将工件作径向夹持与轴向后拉，使工件紧贴基准面不上浮。
- 可配合气密检测，进行轴向位置确认，最适合要求长度精准的加工。。
- 圆柱滑动结构，确保高夹持精度与耐用度，适合使用于重切削的场合。

- With workpiece can do radial clamp and axial pull-down at the same time,which able to closer surface of the chuck.
- Can cooperate with the airtight detection,and axial position confirm,suitable for the precise length control machining requirements
- Chuck Actuators with cylindrical structure are durable and ensures high gripping repeatadility,Suitable for heavy machining

尺寸图 Size Fig

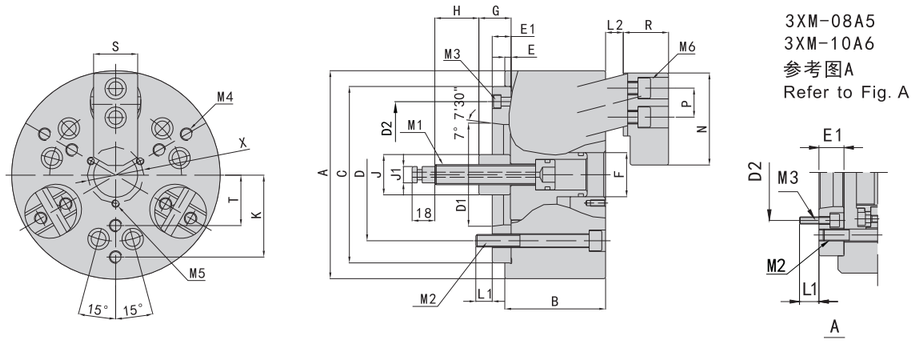

尺寸参数 Dimensions

mm

规格 Spec 型号 Model		A	B	C (H6)	D	D1	D2	E	E1	F	G max	G min	H	J	J1	K	L1
3XM-06	A5	165	85	140	104.8	82.56	116	5	15	35	30	15	35	32	13	55	13
3XM-08	A5	210	100	170	133.4		104.8		23	45	27	7	38	37	16	75	17
	A6					106.38	150		17								
3XM-10	A6	254	110	220	171.4		133.4		25	55	31	11	41	48	20	85	19
	A8					139.72	190		18								

尺寸参数 Dimensions

mm

规格 Spec 型号 Model		L2min	M1	M2	M3	M4	M5	M6	N	P	R	S	T	X
3XM-06	A5	8	M16	6-M10	3-M6	6-M6	3-M5	6-M10	73	23	35	35	35	45
3XM-08	A5	9	M20	6-M12	6-M10	6-M10	3-M6	6-M12	82	26	40	40	50	60
	A6				3-M6									
3XM-10	A6	9	M24	6-M16	6-M12			6-M14	100	32	46	50	55	70
	A8				3-M8									

性能参数 Specifications

规格 Spec 型号 Model		楔心行程 Piunger stroke(mm)	爪行程(直径) Jaw stroke (Dia.)mm	许用推拉力 Max.Pull force KN(kgf)	最大夹紧力 Max. Gripping forceKN(kgf)	极限转速 Max.Speed r/min	夹紧范围 Gripping range(mm)	惯量 Moment of inertialKg.m²	重量 Weight kg	适用油缸 Matching cylinder	最大使用压力 Max.pressure MPa(kgf/cm²)
3XM-06	A5	15	7.8	9(910)	25.0(2550)	3500	22-165	0.05	16.8	SY-75Q	2.5(25)
3XM-08	A5	20	10.3	16(1630)	45.0(4590)	3000	28-210	0.14	28.9	SY-100Q	2.2(22)
	A6								27.1		
3XM-10	A6	20	10.3	21(2140)	60.0(6120)	2500	35-254	0.36	53.5	SY-125Q	1.9(19)
	A8								51.5		

2XM 二爪斜拉式气密动力卡盘

2-JAW CLINED PULL AIR-TIGHT POWER CHUCK

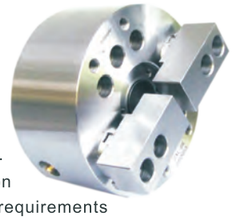

- 可同时将工件作径向夹持与轴向后拉，使工件紧贴基准面不上浮。
- 可配合气密检测，进行轴向位置确认，最适合要求长度精准的加工。。
- 圆柱滑动结构，确保高夹持精度与耐用度，适合使用于重切削的场合。

- With workpiece can do radial clamp and axial pull-down at the same time,which able to closer surface of the chuck.
- Can cooperate with the airtight detection,and axial position confirm,suitable for the precise length control machining requirements
- Chuck Actuators with cylindrical structure are durable and ensures high gripping repeatadility,Suitable for heavy machining

尺寸图 Size Fig

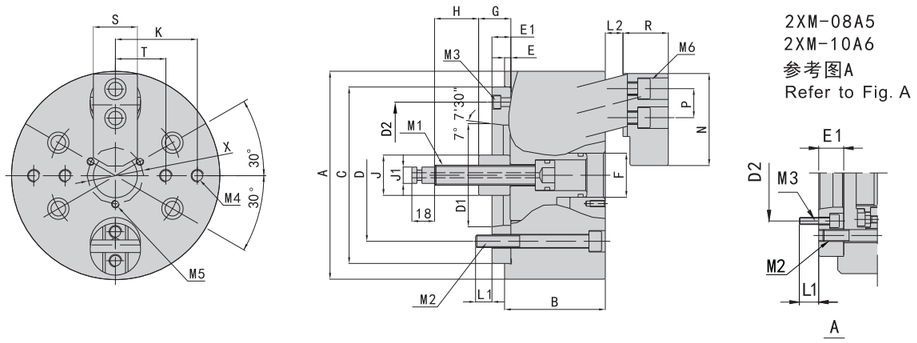

尺寸参数 Dimensions

mm

规格 Spec 型号 Model		A	B	C (H6)	D	D1	D2	E	E1	F	G max	G min	H	J	J1	K	L1
2XM-06	A5	165	85	140	104.8	82.56	116	5	15	35	30	15	35	32	13	55	13
2XM-08	A5	210	100	170	133.4		104.8		23	45	27	7	38	37	16	75	17
	A6					106.38	150		17								
2XM-10	A6	254	110	220	171.4		133.4		25	55	31	11	41	48	20	85	19
	A8					139.72	190		18								

尺寸参数 Dimensions

mm

规格 Spec 型号 Model		L2min	M1	M2	M3	M4	M5	M6	N	P	R	S	T	X
2XM-06	A5	8	M16	6-M10	4-M6	4-M6	3-M5	6-M10	73	23	35	35	35	45
2XM-08	A5	9	M20	6-M12	6-M10	4-M10	3-M6	6-M12	82	26	40	40	50	60
	A6				4-M6									
2XM-10	A6	9	M24	6-M16	6-M12			6-M14	100	32	46	50	55	70
	A8				4-M8									

性能参数 Specifications

规格 Spec 型号 Model		楔心行程 Piunger stroke(mm)	爪行程(直径) Jaw stroke (Dia.)mm	许用推拉力 Max.Pull force KN(kgf)	最大夹紧力 Max. Gripping forceKN(kgf)	极限转速 Max.Speed r/min	夹紧范围 Gripping range(mm)	惯量 Moment of inertialKg.m²	重量 Weight kg	适用油缸 Matching cylinder	最大使用压力 Max.pressure MPa(kgf/cm²)
2XM-06	A5	15	7.8	6(610)	16.7(1700)	3500	22-165	0.05	13.8	SY-75Q	1.7(17)
2XM-08	A5	20	10.3	10.7(1090)	30.0(3060)	3000	28-210	0.14	25.9	SY-100Q	1.5(15)
	A6								24		
2XM-10	A6	20	10.3	14(1430)	40.0(4080)	2500	35-254	0.36	50	SY-125Q	1.3(13)
	A8								48.5		

3SM 三爪强力型拉锁动力卡盘

3-JAW STRONG TYPE PULL LOCK POWER CHUCK

- 可同时将工件作径向夹持与轴向后拉，使工件紧贴基准面不上浮。
- 可配合气密检测，进行轴向位置确认，最适合要求长度精准的加工。。
- 圆柱滑动结构，确保高夹持精度与耐用度，适合使用于重切削的场合。

- With workpiece can do radial clamp and axial pull-down at the same time,which able to closer surface of the chuck.
- Can cooperate with the airtight detection,and axial position confirm,suitable for the precise length control machining requirements
- Chuck Actuators with cylindrical structure are durable and ensures high gripping repeatadility,Suitable for heavy machining

尺寸图 Size Fig

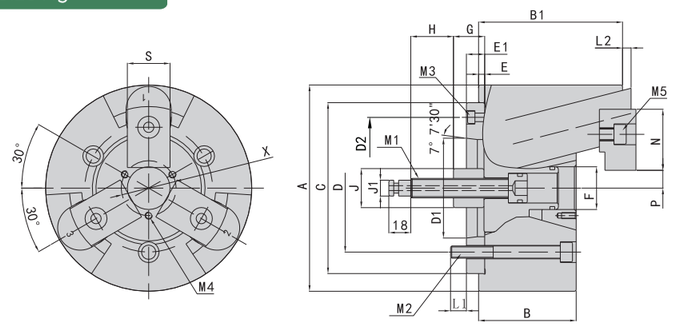

3SM-08A5
3SM-10A6
参考图A
Refer to Fig. A

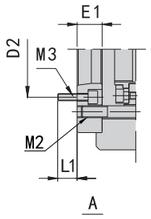

尺寸参数 Dimensions

mm

规格 Spec / 型号 Model		A	B	B1	C (H6)	D	D1	D2	E	E1	F	G max	G min	H	J	J1	L1
3SM-06	A5	168	88	128	140	104.8	82.56	116	5	15	35	30	15	35	32	13	13
3SM-08	A5	210	100	145	170	133.4		104.8		23	45	27	7	38	37	16	17
	A6						106.38	150		17							
3SM-10	A6	254	110	160	220	171.4		133.4		25	55	31	11	41	48	20	19
	A8						139.72	190		18							

尺寸参数 Dimensions

mm

规格 Spec / 型号 Model		L2min	M1	M2	M3	M4	M5	N	P min	S	X
3SM-06	A5	8	M16	3-M10	3-M6	3-M5	3-M10	50	12.5	30	50
3SM-08	A5	9	M20	3-M12	6-M10	3-M6	3-M12	63	12.5	35	60
	A6				3-M6						
3SM-10	A6	9	M24	3-M16	6-M12		3-M14	74	17.5	40	70
	A8				3-M8						

性能参数 Specifications

规格 Spec / 型号 Model		楔心行程 Piunger stroke(mm)	爪行程(直径) Jaw stroke (Dia.)mm	许用推拉力 Max.Pull force KN(kgf)	最大夹紧力 Max. Gripping forceKN(kgf)	极限转速 Max.Speed r/min	夹紧范围 Gripping range(mm)	惯量 Moment of inertialKg.m²	重量 Weight kg	适用油缸 Matching cylinder	最大使用压力 Max.pressure MPa(kgf/cm²)
3SM-06	A5	15	7.8	18.0(1835)	58.0(5910)	6000	25-100	0.05	16.8	SY-100Q	2.6(26)
3SM-08	A5	20	10.3	25.0(2550)	80.0(8150)	5000	25-130	0.14	28.9		3.6(36)
	A6								27.1		
3SM-10	A6	20	10.3	35.0(3570)	100.0(10100)	4000	35-160	0.36	53.5	SY-125Q	3.2(32)
	A8								51.5		

2SM 二爪强力型拉锁动力卡盘

2-JAW STRONG TYPE PULL LOCK POWER CHUCK

- 可同时将工件作径向夹持与轴向后拉，使工件紧贴基准面不上浮。
- 可配合气密检测，进行轴向位置确认，最适合要求长度精准的加工。。
- 圆柱滑动结构，确保高夹持精度与耐用度，适合使用于重切削的场合。

- With workpiece can do radial clamp and axial pull-down at the same time,which able to closer surface of the chuck.
- Can cooperate with the airtight detection,and axial position confirm,suitable for the precise length control machining requirements
- Chuck Actuators with cylindrical structure are durable and ensures high gripping repeatadility,Suitable for heavy machining

尺寸图 Size Fig

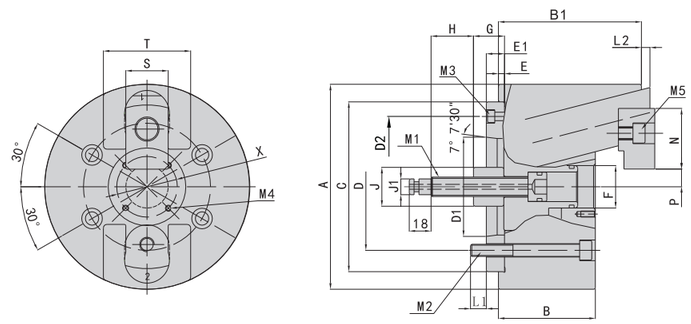

2SM-08A5
2SM-10A6
参考图A
Refer to Fig. A

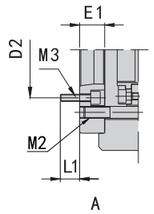

尺寸参数 Dimensions

mm

规格 Spec / 型号 Model		A	B	B1	C (H6)	D	D1	D2	E	E1	F	G max	G min	H	J	J1	L1
2SM-05	A4	135	70	100	110	82.6	63.51	96	4	15	30	29	19	32	28	11	13
2SM-06	A5	168	88	128	140	104.8	82.56	116	5		35	39	24	32	32	13	16
2SM-08	A5	210	100	145	170	133.4		104.8		23	45	44	24	38	37	17	18
	A6						106.38	150		17							
2SM-10	A6	254	110	160	220	171.4		133.4		25	55	44	24	38	45	17	20
	A8						139.72	190		18							

尺寸参数 Dimensions

mm

规格 Spec / 型号 Model		L2min	M1	M2	M3	M4	M5	N	P min	S	T	X
2SM-05	A4	±5	M14	4-M10	4-M6	4-M5	2-M10	45	8	28	60	40
2SM-06	A5	±7.5	M16	4-M10	4-M6	4-M5	2-M12	50	10	35	72	50
2SM-08	A5	±10	M20	4-M12	4-M10	4-M6	2-M12	63	12.5	40	85	60
	A6				4-M6							
2SM-10	A6	±10	M20	4-M16	4-M12		2-M14	74	15	50	100	70
	A8				4-M8							

性能参数 Specifications

规格 Spec / 型号 Model		楔心行程 Piunger stroke(mm)	爪行程(直径) Jaw stroke (Dia.)mm	许用推拉力 Max.Pull force KN(kgf)	最大夹紧力 Max. Gripping forceKN(kgf)	极限转速 Max.Speed r/min	夹紧范围 Gripping range(mm)	惯量 Moment of inertialKg.m²	重量 Weight kg	适用油缸 Matching cylinder	最大使用压力 Max.pressure MPa(kgf/cm²)
2SM-05	A4	10	5.2	8.1(830)	25(2550)	6000	16-48	0.02	7.1	SY-75Q	2.3(23)
2SM-06	A5	15	7.8	16.7(1700)	52.4(5350)		22-60	0.05	13.8	SY-100Q	2.4(24)
2SM-08	A5	20	10.3	23.7(2420)	74.5(7600)	5000	32-90	0.14	25.9		3.4(34)
	A6								24		
2SM-10	A6	20	10.3	34.3(3500)	107.8(11000)	4000	45-120	0.36	50	SY-125Q	3.2(32)
	A8								48.5		

3ZX 三爪指形动力卡盘

3-JAW FINGER POWER CHUCK

- 采用工件端面夹紧，有效防止薄壁工件的夹持变形。
- 内部的补偿结构,夹持不规则端面的工件时可以自动调节
- 卡盘中心设置通孔,可装工件气密着座装置,也可进行空气喷射。

- By clamping the end face of the workpiece, the clamping deformation of the thin-wallworpiece can be effectively prevented.
- The internal compensation structure can be adjusted automatically when the workpiece with irregular ends is clamped.
- The center of the chuck is provided with a through hole,and the air tiht seat holder for the workpiece can be arranged,and air injection can also be carried out.

尺寸图 Size Fig

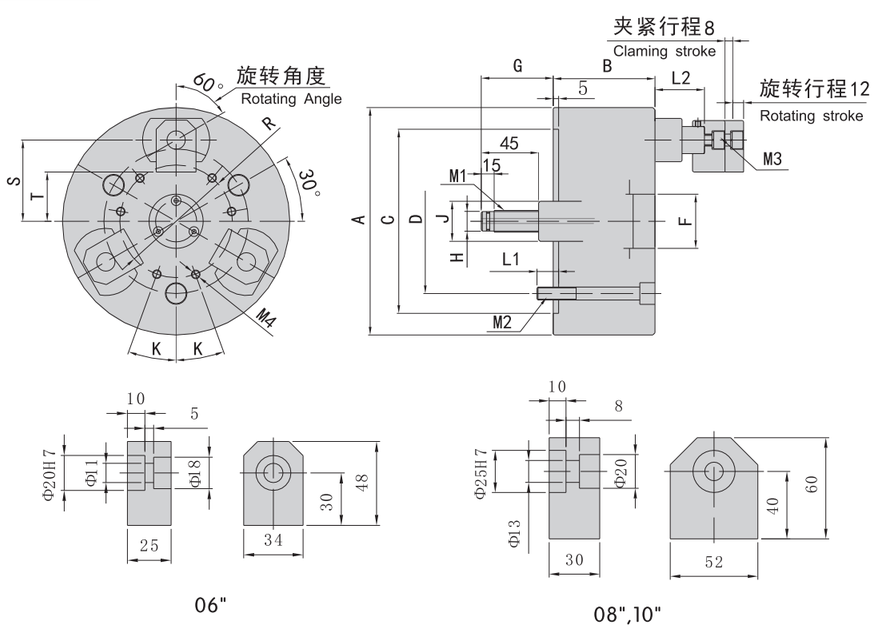

尺寸参数 Dimensions

mm

规格 Spec / 型号 Model	A	B	C (H6)	D	F	G max	G min	H	J	K	L1	L2	M1	M2	M3	M4	R	S	J
3ZX-06	165	86	140	104.8	45	70	50	14	28	21	15	36-56	M16	M10	M10	3-M6	64	57.5	40
3ZX-08	210	90	170	133.4	56	75	55	16	38	20°	18	50-70	M20	M12	M12	3-M8	104	77.5	53.5
3ZX-10	254	95	220	171.4		70	50				24			M16		6-M8	140	99.5	75.5

性能参数 Specifications

规格 Spec / 型号 Model	楔心行程 Piunger stroke(mm)	爪行程(直径) Jaw stroke (Dia.) mm	许用推拉力 Max.Pull force KN(kgf)	最大夹紧力 Max. Gripping forceKN(kgf)	极限转速 Max. Speed r/min	夹紧范围 Gripping range(mm)	惯量 Moment of inertialKg.m²	重量 Weight kg	适用油缸 Matching cylinder	最大使用压力 Max. pressure MPa(kgf/cm²)
3ZX-06	12	8	9(920)	7.5(765)	4000	55-79	0.05	12	SY-100	1.2(12)
3ZX-08			18(1835)	16.5(1680)	3500	75-106	0.14	23		2.5(25)
3ZX-10						119-150	0.31	33		

2ZX 二爪指形动力卡盘

2-JAW FINGER POWER CHUCK

- 采用工件端面夹紧，有效防止薄壁工件的夹持变形。
- 内部的补偿结构,夹持不规则端面的工件时可以自动调节
- 卡盘中心设置通孔,可装工件气密着座装置,也可进行空气喷射。

- By clamping the end face of the workpiece,the clamping deformation of the thin-wall workpiece can be effectively prevented.
- The internal compensation structure can be adjusted automatically when the workpiece with irregular ends is clamped.
- The center of the chuck is provided with a through hole,and the air tiht seat holder for the workpiece can be arranged,and air injection can also be carried out.

尺寸图 Size Fig

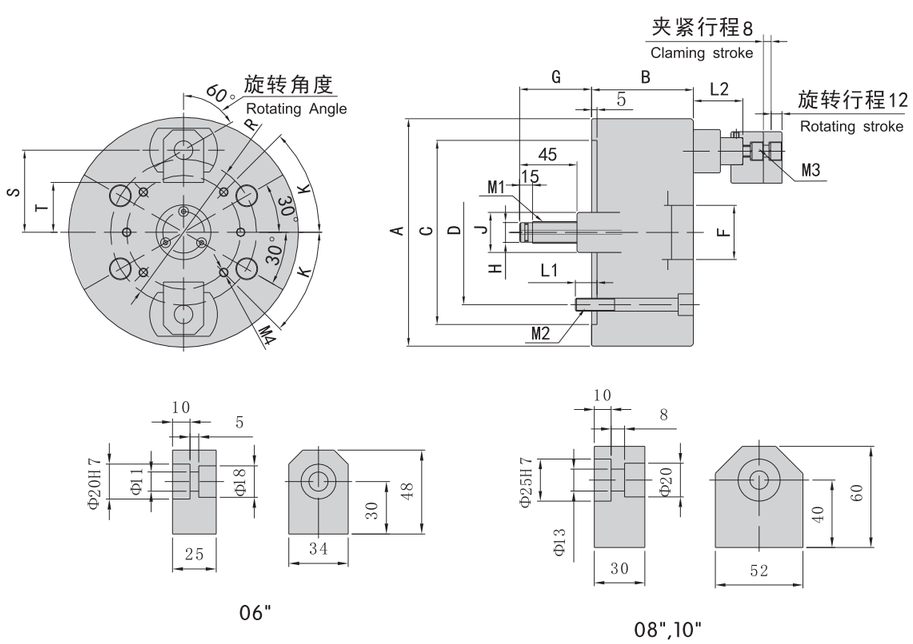

尺寸参数 Dimensions

mm

规格 Spec / 型号 Model	A	B	C (H6)	D	F	G max	G min	H	J	K	L1	L2	M1	M2	M3	M4	R	S	T
2ZX-06	165	86	140	104.8	45	70	50	14	28	30°	15	36-56	M16	M10	M10	4-M6	64	57.5	40
2ZX-08	210	90	170	133.4	56	75	55	16	38	50°	18	50-70	M20	M12	M12	4-M8	104	77.5	53.5
2ZX-10	254	95	220	171.4		70	50				24			M16		6-M8	140	99.5	75.5

性能参数 Specifications

规格 Spec / 型号 Model	楔心行程 Piunger stroke(mm)	爪行程(直径) Jaw stroke (Dia.) mm	许用推拉力 Max.Pull force KN(kgf)	最大夹紧力 Max. Gripping forceKN(kgf)	极限转速 Max. Speed r/min	夹紧范围 Gripping range(mm)	惯量 Moment of inertialKg.m²	重量 Weight kg	适用油缸 Matching cylinder	最大使用压力 Max. pressure MPa(kgf/cm²)
2ZX-06	12	8	6(610)	5(510)	4000	55-79	0.04	9.8	SY-100	0.8(8)
2ZX-08			12(1224)	11(1120)	3500	75-106	0.12	20.3		1.7(17)
2ZX-10						119-150	0.28	30.7		

MJ 牵引夹盘

TRACTION CHUCK

- 适合于外圆磨床,安装方便。
- 自动夹紧功能,非常适合自动化生产。

- Suitable for external grinding Machine, installation is convenient.
- Automatic clamping function,especially suitable for automatic production.

安装使用 Install and use

安装:
将夹盘的莫氏锥柄插入磨床主轴锥孔内,同时将带动盘的拨杆插入夹盘的拨杆孔即完成安装。

Installation:
insert the Morse taper shank of the chuck into the main shaft of the cylindrical grinding machine,and insert the drive rod into the drive hole of the chuck,and the installation is completed.

使用:
将工件装在磨床两顶尖上,启动磨床头架主轴正转,夹盘转动同时自动夹住工件一起转动,进行磨削加工.磨削完成后头架主轴反转,夹盘即可自动松开工件。

Operation:
The workpiece mounted grinding machine two top,start grinding machine spindle is rotating, chuck rotation automatic clamp workpiece rotate together at the same time,for grinding is completed,grinder spindle for inversion,chuck can automatically release artifacts.

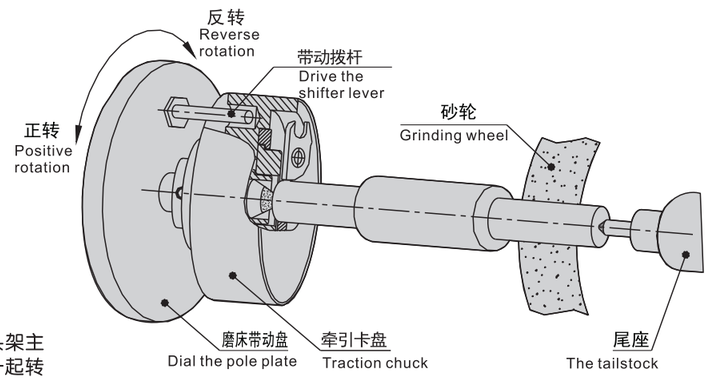

尺寸图 Size Fig

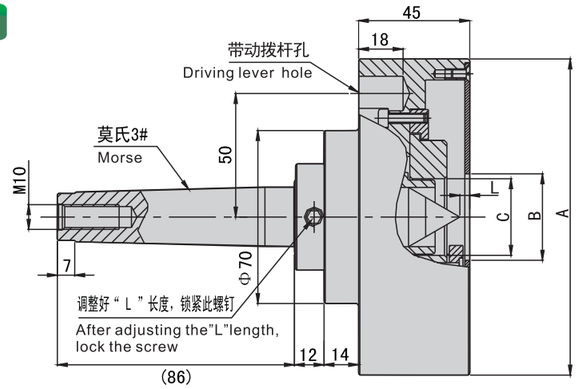

尺寸参数 Dimensions

mm

规格 Spec 型号 Model	夹紧范围(直径) mm Chucking Range(Dia)	A	B	C	L	惯量 Kg.m² Moment of inertia	重量 kg Weight
MJ-10	6-10	128	33	31	根据中心孔大小调整 Adjust the positionby the size of the center hole	0.02	2.5
MJ-14	10-14						
MJ-18	14-18						
MJ-22	18-22	142	50	42		0.03	2.7
MJ-25	22-25.5						
MJ-29	25.5-29						

3KL 中空立式夹盘

STATIONARY CHUCK WITH THROUGH-HOLE

- 适合在钻床、铣床、加工中心上使用。
- 安装简单：单个安装只需配T型螺钉即可。
- 群组安装：将数个夹盘安装于固定板上即可快速换模。
- 软爪、硬爪可替换，节省成本。

- Suitable for drilling, milling and Machining, center.
- Simple installation: Asingle installation requires only-type screw
- Group to Install: Install a number of chuck plates on the plate, You can quickly replactit.
- Soft jaw and hardened jaw can be replaced to save cost.

尺寸图 Size Fig

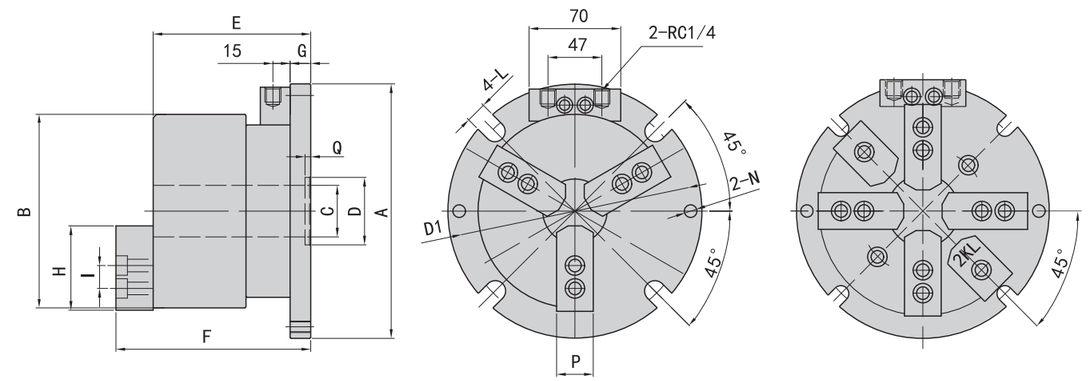

尺寸参数 Dimensions

mm

规格 Spec 型号 Model	A	B	C	D (H7)	D1	E	F	G	H	I	Q	L	N (H7)	P
3KL-05	158	135	28	50	140	111	142	12	62	14	5	9	10	25
3KL-06	178	169	40	60	160	138	175	14	73	20	5	11	10	31
3KL-08	210	210	45	80	190	158	196	16	95	25	5	13	10	35
3KL-10	250	254	70	90	230	186	229	18	100	30	6	13	12	40
3KL-12	266	304	82	90	246	200	251	18	130	30	6	13	12	50

性能参数 Specifications

规格 Spec 型号 Model	活塞面积 cm² Eff. piston area	活塞行程 mm piston stroke	爪行程(直径) mm Jaw stroke(Dia.)	最大夹紧力 KN(kgf) Max. Clamping force	最大使用压力 Mpa(Kgf/cm²) Max. pressure	夹紧范围 mm Chucking Range	重量 kg Weight
3KL-05	46.7	10	5.4	35.8 (3650)	3.7(37)	7-135	12
3KL-06	60.4	12	5.5	56.8 (5800)	3.6(36)	12-168	20
3KL-08	98	16	7.4	85.8 (8750)	3.6(36)	15-210	34
3KL-10	128.6	19	8.8	110.7 (11300)	3.4(34)	31-254	56
3KL-12	155.3	23	10.6	143.6 (14650)	3.6(36)	34-304	80

注：二爪立式夹盘的最大油压力应为三爪同规格所标最大油压力的三分之二。
The maximum oil pressure of the two-claw vertical chuck should be two thirds of the maximum oil pressure of the three claws.

3NL 内置立式夹盘

STATIONARY CHUCK WITH BUILT-IN CYLINDER

- 适合在钻床、铣床、加工中心上使用。
- 安装简单：单个安装只需配T型螺钉即可。
- 群组安装：将数个夹盘安装于固定板上即可快速换模。
- 气缸内置，能确保连接的稳定性。
- 软爪、硬爪可替换，节省成本。

- Suitable for drilling,milling and machining,center
- Simple installation:Asingle installation requires only-type screw.
- Group to install:Install a number of chuck plates on the plate,You can quichly replact it.
- Built-in cylinder,More ensuring the stability of the rconnection.
- Soft jaw and hardened jaw can be replaced to save cost.

尺寸图 Size Fig

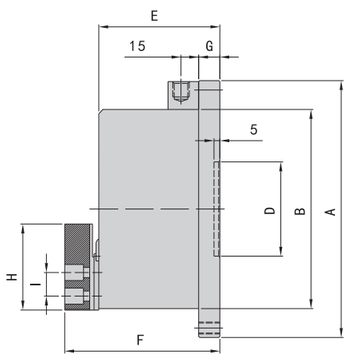

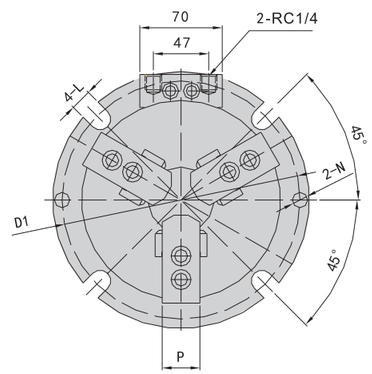

尺寸参数 Dimensions

mm

规格 Spec / 型号 Model	A	B	D (H7)	D1	E	F	G	H	I	L	M	N (H7)	P
3NL-06	218	168	80	202	95	131	15	72	20	11	11	10	31
3NL-08	258	210	80	243	106	148	15	95	25	13	11	10	35

性能参数 Specifications

规格 Spec / 型号 Model	活塞面积 cm^2 Eff.piston area	活塞行程 mm Piston stroke	爪行程(直径) mm Jaw stroke(Dia.)	最大夹紧力KN(kgf) Max. clamping force	最大气压力Mpa(Kgf/cm^2) Max. pressure	夹紧范围 mm Chucking Dia.	重量 kg Weight
3NL-06	102	11.5	3.25	37.8(3850)	0.8(8)	14-168	16
3NL-08	160	13.5	4	63.6(6490)	0.8(8)	17-210	27

3KL-Z 立式夹盘组

STATIONARY CHUCK COMBINATION

- 适合在铣床和加工中心上使用。
- 多夹盘并列组合可实现多工件同时加工。
- 二爪卡盘和三爪卡盘可自由组合。

- Suitable for sue in milling machines and Machining centers.
- Multiple stationary chucks combined together to allow multiple artifacts to processed simultaneously.
- Two jaw chuck and three-jaw chuck can be combiner freely.

型号表示 Model representation

4Z3KL-05

- 夹盘规格 Chuck size
- 组合板 Combination plate
- 夹盘数 Chuck quantity

尺寸图 Size Fig

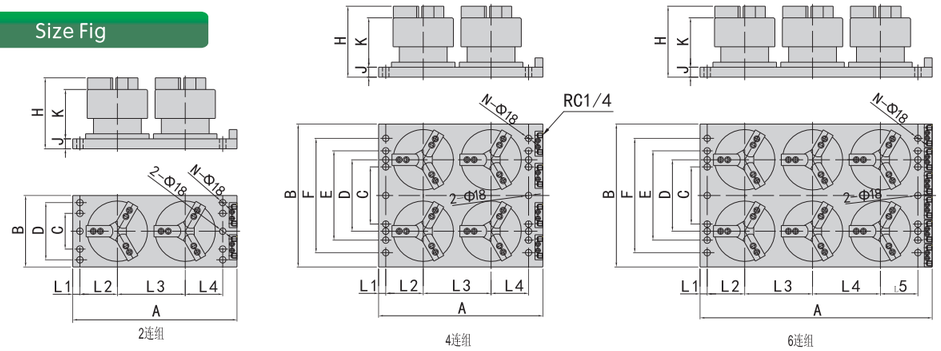

尺寸参数 Dimensions

mm

规格 Spec / 型号 Model	技术规格 Spec	A	B	C	D	E	F	H	J	K	L1	L2	L3	L4	L5	N
2Z3KL-05	2连	440	200	100	160	—	—	164	22	111	20	100	180	100	—	8
2Z3KL-06	2连	460	200	100	160	—	—	200	25	138	20	105	190	105	—	8
2Z3KL-08	2连	540	240	160	200	—	—	224	28	158	20	125	230	125	—	8
2Z3KL-10	2连	640	290	160	200	250	—	259	30	186	20	150	280	150	—	8
4Z3KL-05	4连	440	360	160	200	250	320	164	22	111	20	100	180	100	—	16
4Z3KL-06	4连	460	400	160	200	250	320	200	25	138	20	105	190	105	—	16
4Z3KL-08	4连	540	480	200	250	320	400	224	28	158	20	125	230	125	—	16
4Z3KL-10	4连	640	580	200	250	400	500	259	30	186	20	150	280	150	—	16
6Z3KL-05	6连	620	360	160	200	250	320	164	22	111	20	100	180	180	100	16
6Z3KL-06	6连	650	400	160	200	250	320	200	25	138	20	105	190	190	105	16
6Z3KL-08	6连	770	480	200	250	320	400	224	28	158	20	125	230	230	125	16

性能参数 Specifications

规格 Spec / 型号 Model	活塞面积 cm^2 Eff. piston area	活塞行程 mm piston stroke	爪行程(直径) mm Jaw stroke(Dia.)	最大夹紧力 KN(kgf) Max. Clamping force	最大使用压力 Mpa(Kgf/cm^2) Max. pressure	夹紧范围 mm Chucking Range	重量 kg Weight
3KL-05	46.7	10	5.4	35.8 (3650)	3.7(37)	7-135	12
3KL-06	60.4	12	5.5	56.8 (5800)	3.6(36)	12-168	20
3KL-08	98	16	7.4	85.8 (8750)	3.6(36)	15-210	34
3KL-10	128.6	19	8.8	110.7 (11300)	3.4(34)	31-254	56

注：1. 性能参数表所标数据为单个夹盘之数据。
1. The data in the performance parameter table is the data of a single chuck
2. 二爪立式夹盘的最大油压力应为三爪同规格所标最大油压力的三分之二。
2.The maximum oil pressure of the two-claw vertical chuck should be two thirds of the maximum oil pressure of the three claws.

HJ 标准硬卡爪

STANDARD HARDENED JAW

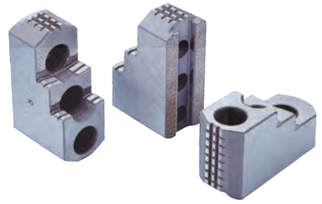

尺寸图 Size Fig

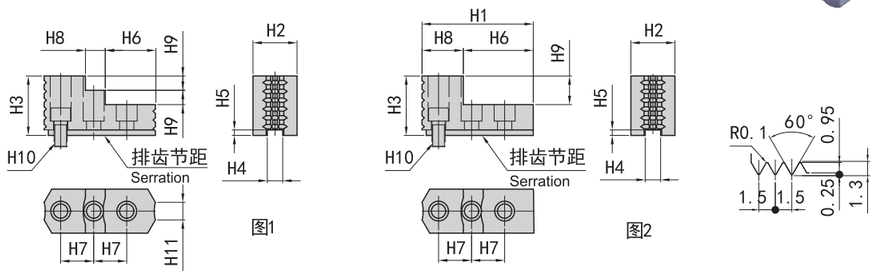

尺寸参数 Dimensions

mm

规格 Spec / 型号 Model	H-1	H-2	H-3	H-4	H-5	H-6	H-7	H-8	H-9	H-10	H-11	适用卡盘 Matching Chuck	三爪重量 kg 3 Jaw Weight(kg)	参考图 Reference Drawing
HJ-05	53	23	28	10	4	30.5	14	22.5	10	M8	6	3K-04, 3K-05, 3S-05	0.4	Fig2
HJ-06	67	31	35	12		40	20	26.6	12	M10	10	3K-06 3S-06	1.0	
HJ-08	88	35	51	14		31	25	18		M12	12	3K-08 3S-08	1.95	Fig1
HJ-10	101	40	54	16	5	43		17	13		13	3K-10 3S-10	2.9	
HJ-12	103	50	52	21		62.5	30	40.5	17	M16	30	3K-12 3S-12	2.65	Fig2
HJ-12-1				18						M14		3S-12	2.7	
HJ-15	149	62	86	25.5	8	63	43	34	20	M20	43	3K-15 3S-15	9.4	Fig1
HJ-15-1				22								3K-15	9.5	

SJ 标准软卡爪

STANDARD SOFT BLANK JAW

尺寸图 Size Fig

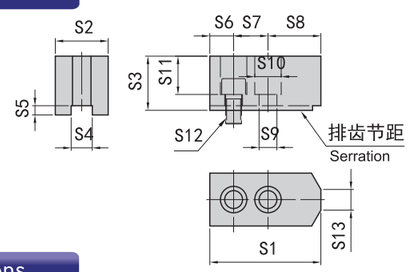

尺寸参数 Dimensions

mm

规格 Spec / 型号 Model	S-1	S-2	S-3	S-4	S-5	S-6	S-7	S-8	S-9	S-10	S-11	S-12	S-13	适用卡盘 Matching Chuck	三爪重量 kg 3 Jaw Weight(kg)
SJ-04	52	23	23	10	4	10	14	28	9	14	13	M8	3	3K-04 3S-04	0.5
SJ-05	62	25	30					38			16		3.5	3K-05 3S-05	0.7
SJ-06	73	31	36	12		15	20		11	17	20	M10	14	3K-06 3S-06	1.5
SJ-08	95	35	37	14		24	25	46	13	19	22	M12	16	3K-08 3S-08	2.5
SJ-10	110	40	42	16	5	30		50			27			3K-10 3S-10	3.7
SJ-12	130	50	50	21		49	30	61	18	26	30	M16	18	3K-12 3S-12	6.2
SJ-12-1				18					16	23		M14		3S-12	6.3
SJ-15	165	62	62	25.5		37	43	85	21	32	38	M20		3K-15 3S-15	12.6
SJ-15-1				22	8									3K-15	12.7

FL 卡盘法兰

CHUCK ADAPTERS

尺寸图 Size Fig

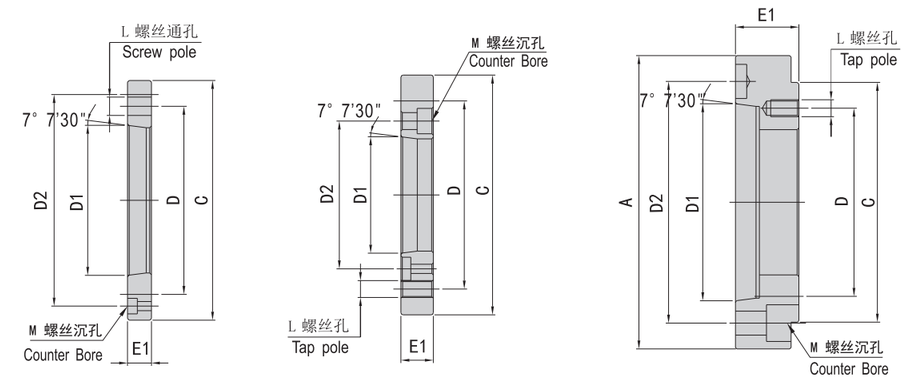

Fig 1 Fig 2 Fig 3

尺寸参数 Dimensions

mm

规格 Spec / 型号 Model	A	C (h6)	D	D1	D2	E1	L	M	适用卡盘 Matching chuck	重量 Weight kg	图 Fig
FL-04A4	110	85	70.6	63.513	82.6	28	M10	M10	3K-04, 2K-04	1.12	Fig 3
FL-05A4	–	110	82.6		96	15		M6	3K-05, 2K-05, 3S-05, 2S-05	0.65	Fig 1
FL-05A5	135			82.563	104.8	30		M10		1.99	Fig 3
FL-06A4	–	140	104.8	63.513	82.6	21		M10	3K-06, 2K-06, 4K-06, 3KC-06, 2KC-06 3KD-06, 3S-06, 2S-06, 4S-06	1.40	Fig 2
FL-06A5	–			82.563	116	15		M6		0.96	Fig 1
FL-06A6	–			106.375	133.4	35		M12		3.12	Fig 3
FL-08A5	–	170	133.4	82.563	104.8	23	M12	M10	3K-08, 2K-08, 4K-08, 3KC-08, 2KC-08, 3S-08, 2S-08, 4S-08	2.70	Fig 2
FL-08A6	–			106.375	150	17		M6	3K-08, 2K-08, 4K-08, 3KD-08, 3KC-08, 2KC-08, 3S-08, 2S-08, 4S-08	1.55	Fig 1
FL-10A6	–	220	171.4		133.4	25	M16	M12	3K-10, 2K-10, 4K-10, 3KC-10, 2KC-10, 3S-10, 2S-10, 4S-10 3K-12, 2K-12, 4K-12, 3KC-12, 2KC-12, 3S-12, 2S-12, 4S-12	5.02	Fig 2
FL-10A8	–			139.719	190	18		M8	3K-10, 2K-10, 4K-10, 3KD-10, 3KC-10, 2KC-10, 3S-10, 2S-10, 4S-10 3K-12, 2K-12, 4K-12, 3KD-12, 3KC-12, 2KC-12, 3S-120, 2S-12, 4S-12	2.73	Fig 1
FL-15A8	–	300	235		171.4	33	M20	M16	3K-15, 2K-15, 4K-15, 3S-15, 2S-15, 3K-18, 4K-18, 3S-18, 4S-18	12.52	Fig 2
FL-15A11	–			196.869	260	22		M10	3KD-12, 3K-15, 2K-15, 4K-15, 3S-15, 2S-15, 3K-18, 4K-18, 3S-18, 4S-18	6.03	Fig 1
FL-21A8	–	380	330.2	139.719	171.4	27	M24	M16	3S-21, 4S-21, 3S-24, 4S-24	22.05	Fig 2
FL-21A11	–			196.869	235			M20		16.28	Fig 2
FL-21A15	–			285.775	330.2			M12	3KD-15, 3KD-18, 3S-21, 4S-21, 3S-24, 4S-24	8.60	Fig 1
FL-40A15	–	520	463.6			40		M24		43.26	Fig 2
FL-40A20	–			412.775	463.6	27		M12		13.55	Fig 1

E型 弹性筒夹

STEEL COLLETS

筒夹规范 **DIN 6343 Collet standard**

尺寸图 Size Fig

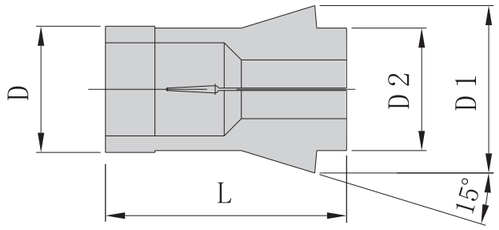

尺寸参数 Dimensions

mm

弹性筒夹 Collet	最大夹持能力 Max.Chucking Capacity mm 圆棒 Round	六角料 Hexagon	方料 Square	D (h6)	D1	D2 (h6)	L	适用筒夹夹头 Matching Collet Chuck
161E	3-26	4-22	4-18	32	45	34	75	CL-26, CL-26A4
163E	3-30	4-26	4-20	35	48	38	80	CL-30, CL-30A4
171E	3-36	6-32	6-26	42	55	42	94	CL-36 CL-36A5
173E	3-42	6-36	6-29	48	60	50	94	CL-42, CL-42A5, CL-42A6
177E	5-52	8-45	7-36	58	70	60	94	CL-52, CL-52A6
185E	5-60	8-52	7-42	66	84	73	110	CL-6017, CL-6022, CL-60A6, CL-60A8
193E	20-80	18-69	15-56	90	107	92	130	CL-80 CL-80A8

ACCESSORIES

B型 弹性筒夹

STEEL COLLETS

尺寸图 Size Fig

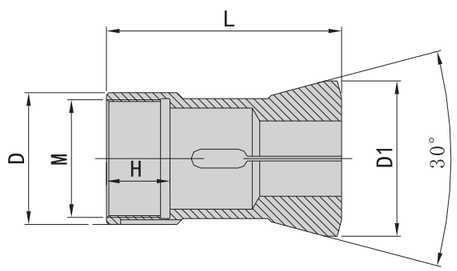

尺寸参数 Dimensions

mm

弹性筒夹 Collet	最大夹持能力 Max.Chucking Capacity mm 圆棒 Round	六角料 Hexagon	方料 Square	D (h6)	D1	H	L	M	适用筒夹夹头 Matching Collet Chuck
B26	3-26	4-22	4-18	40	49	27	95	M33X1.5	HT-26 HT-26A4
B35	3-35	6-32	6-26	49	59	27	95	M42X1.5	HT-35 HT-35A4
B42	3-42	6-36	6-29	56	66	27	100	M50X2	HT-42 HT-42A5 HT42A6
B52	5-52	8-45	7-36	65	74	27	100	M55X2	HT-52 HT-52A5 HT52A6

KQ 中空回转气压缸

HOLLOW ROTARY PRESSURE CYLINDER

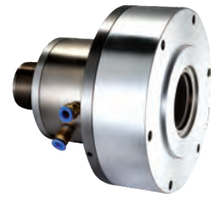

气缸采用优质铝合金制造，重量轻、体积小、经久耐用。中空结构适合较长工件加工，为理想的夹紧驱动装置。

1. The cylinder body is made of high quality aluminum alloy, lightweight,small and durable.the hollow structure is suitable for the machining of long working parts Ideal clamping actuator.

尺寸图 Size Fig

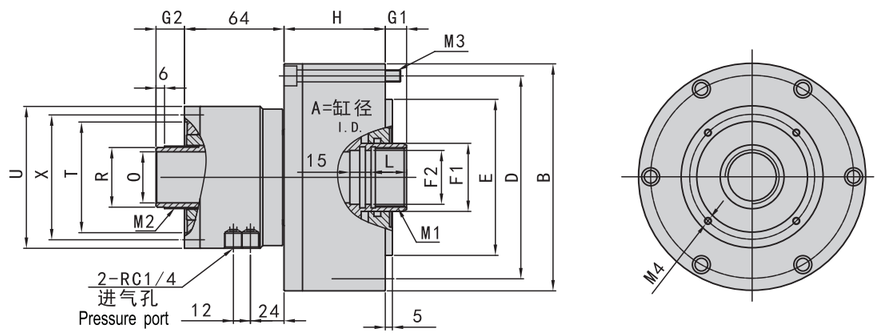

尺寸参数 Dimensions

mm

规格 Spec 型号 Model	A	B	D	E (H7)	F1	F2 (H8)	G1 max	G1 min	G2 max	G2 min	H	L
KQ-130	130	160	143	110	45	36	4	0	30	26	47	25
KQ-150	150	180	163		65	50	15		40	25	64	30

尺寸参数 Dimensions

mm

规格 Spec 型号 Model	M1	M2	M3	M4	O	R	T	U	X
KQ-130	M38X1.5	M44X1.5	6-M8X60	4-M5X8	34	42	70	92	85
KQ-150	M55X2	M52X1.5	6-M8X75		46	50	82	104	97

性能参数 Specifications

规格 Spec 型号 Model	活塞面积 Eff piston area cm^2 推侧 Extend	拉侧 Retract	活塞行程 mm Piston stroke	极限转速 r/min Max. speed	最大使用压力 kgf/cm^2 (Mpa) Max. pressure	最大推拉力 Max.pull force kgf (KN) 推侧 Extend	拉侧 Retract	惯量 $Kg.m^2$ Moment of inertia	重量 kg Weight
KQ-130	114.9	114.6	4	5000	8 (0.8)	827 (8.1)	824 (8)	0.04	8.2
KQ-150	154.65	143.53	15	4500		1114 (10.9)	1033 (10.1)	0.09	9.5

ROTARY CYLINDER

KQ-B 双活塞中空回转气压缸

DOUBLE PISTON HOLLOW ROTARY PRESSURE CYLINDER

气缸采用优质铝合金制造，重量轻、体积小、经久耐用。中空结构适合较长工件加工，为理想的夹紧驱动装置。

1. The cylinder body is made of high quality aluminum alloy, lightweight,small and durable.the hollow structure is suitable for the machining of long working parts Ideal clamping actuator.

尺寸图 Size Fig

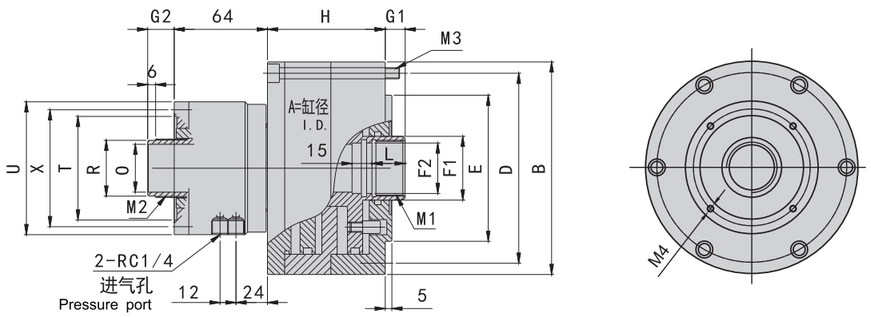

尺寸参数 Dimensions

mm

规格 Spec / 型号 Model	A	B	D	E (H7)	F1	F2 (H8)	G1 max	G1 min	G2 max	G2 min	H	L
KQ-130B	130	160	143	110	45	36	12	0	30	18	92	25
KQ-150B	150	180	163		65	50	15		40	25	104.5	30

尺寸参数 Dimensions

mm

规格 Spec / 型号 Model	M1	M2	M3	M4	O	R	T	U	X
KQ-130B	M38X1.5	M44X1.5	6-M8X90	4-M5X8	34	42	70	92	85
KQ-150B	M55X2	M52X1.5	6-M8X105		46	50	82	104	97

性能参数 Specifications

规格 Spec / 型号 Model	活塞面积 Eff piston area cm² 推侧 Extend	拉侧 Retract	活塞行程 mm Piston stroke	极限转速 r/min Max. speed	最大使用压力 kgf/cm² (Mpa) Max. pressure	最大推拉力 Max.pull force kgf (KN) 推侧 Extend	拉侧 Retract	惯量 Kg. m² Moment of inertia	重量 kg Weight
KQ-130B	223.8	223.5	12	5000	8 (0.8)	1611 (15.8)	1609 (15.7)	0.08	9
KQ-150B	300.19	289	15	4500		2161 (21.18)	2080 (20.39)	0.18	12.5

SQ 中实回转气压缸

ROTATING AIR CYLINDER

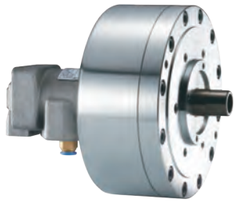

气缸采用优质铝合金制造，重量轻、体积小、经久耐用。为理想的夹紧驱动装置。

1. The cylinder body is made of high quality aluminum alloy, lightweight,small and durable.Ideal clamping actuator.

尺寸图 Size Fig

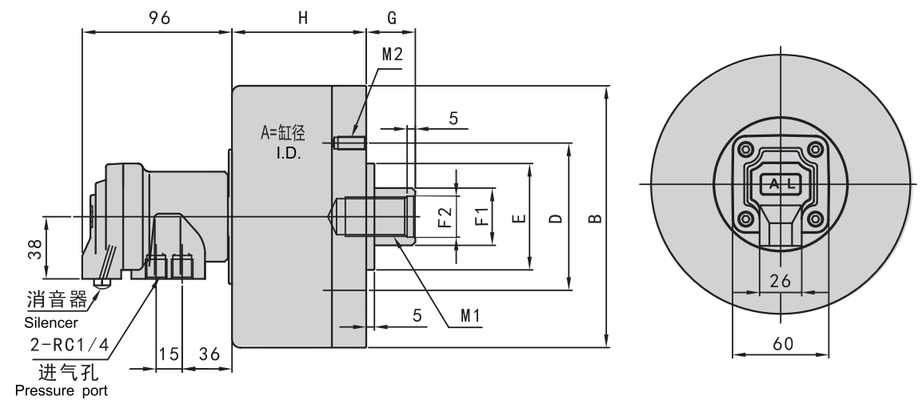

尺寸参数 Dimensions

mm

规格 Spec / 型号 Model	A	B	D	E (H7)	F1	F2 (H8)	G max	G min	H	M1	M2
SQ-130	130	160	90	65	25	17	45	30	70	M16X25	6-M8X18
SQ-150	150	180	100	80						M16X30	6-M10X18
SQ-170	170	200					40	20	77		

性能参数 Specifications

规格 Spec / 型号 Model	活塞面积 Eff piston area cm² 推侧 Extend	拉侧 Retract	活塞行程 mm Piston stroke	极限转速 r/min Max. speed	最大使用压力 kgf/cm² (Mpa) Max. pressure	最大推拉力 Max.pull force kgf (KN) 推侧 Extend	拉侧 Retract	惯量 Kg. m² Moment of inertia	重量 kg Weight
SQ-130	131.12	127.76	15	5000	8 (0.8)	944 (9.25)	920 (9)	0.05	5.3
SQ-150	174	170.7				1253 (12.3)	1231 (12)	0.09	6.6
SQ-170	225.3	219.8	20			1622 (15.9)	1582 (15.5)	0.13	8.5

SQ-B 双活塞中实回转气压缸

DOUBLE PISTON ROTATING AIR CYLINDER

气缸采用优质铝合金制造，重量轻、体积小、经久耐用。为理想的夹紧驱动装置。

1. The cylinder body is made of high quality aluminum alloy, lightweight,small and durable.Ideal clamping actuator.

尺寸图 Size Fig

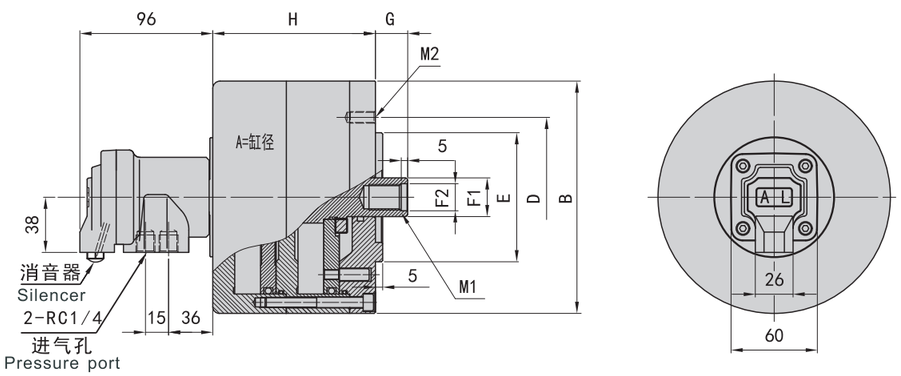

尺寸参数 Dimensions

mm

规格 Spec / 型号 Model	A	B	D	E (H7)	F1	F2 (H8)	G max	G min	H	M1	M2
SQ-130B	130	160	90	65	25	17	45	30	113	M16X25	6-M8X18
SQ-150B	150	180	125	100	30	21	31	11	126	M20X30	6-M10X18
SQ-170B	170	200	100	80			40	20	126		
SQ-200B	200	236	160	125	44	23	35	5	162	M22X30	8-M12X20

性能参数 Specifications

规格 Spec / 型号 Model	活塞面积 Eff piston area cm^2 推侧 Extend	拉侧 Retract	活塞行程 mm Piston stroke	极限转速 r/min Max. speed	最大使用压力 kgf/cm^2 (Mpa) Max. pressure	最大推拉力 Max.pull force kgf (KN) 推侧 Extend	拉侧 Retract	惯量 Kg. m^2 Moment of inertia	重量 kg Weight
SQ-130B	254. 23	250. 87	15	4000	8 (0. 8)	1830 (17. 9)	1806 (17. 7)	0. 11	8. 0
SQ-150B	339	332	20			2440 (23. 9)	2390 (23. 4)	0. 19	9. 3
SQ-170B	442	436. 4				3182 (31. 1)	3142 (30. 8)	0. 27	10. 5
SQ-200B	603. 5	590	30			4345 (42. 58)	4248 (41. 63)	0. 45	13

ROTARY CYLINDER

KY-90 小通孔回转油压缸

ROTATING HYDRAULIC CYLINDER WITH SMALL THROUGH-HOLE

1. 油缸体采用优质铝合金制造，小通孔，重量轻、体积小、经久耐用。

1. The cylinder body is made of high quality aluminum alloy, small through-hole, lightweight, small and durable.

尺寸图 Size Fig

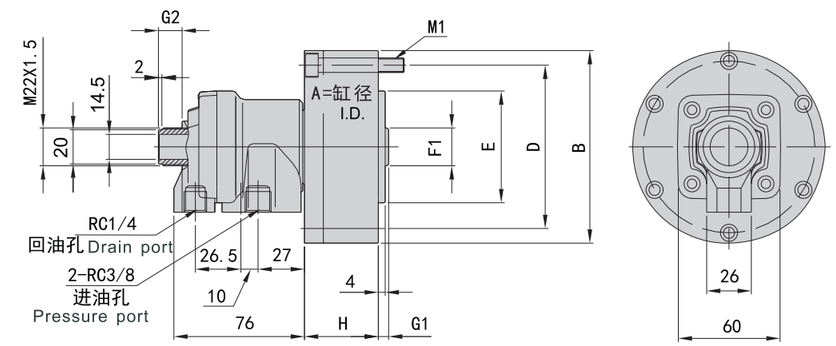

尺寸参数 Dimensions

mm

规格 Spec / 型号 Model	A	B	D	E (H7)	F1	G1 max	G1 min	G2 max	G2 min	H	M1
KY-90	90	112	100	60	22	6	0	24	18	42	6-M6X50

性能参数 Specifications

规格 Spec / 型号 Model	活塞面积 Eff piston area cm^2 推侧 Extend	拉侧 Retract	活塞行程 mm Piston stroke	极限转速 r/min Max. speed	最大使用压力 kgf/cm^2 (Mpa) Max. pressure	最大推拉力 Max.pull force kgf (KN) 推侧 Extend	拉侧 Retract	惯量 Kg. m^2 Moment of inertia	重量 kg Weight
KY-90	59. 8	59. 8	6	3000	25 (2. 5)	1315 (13. 42)	1315 (13. 42)	0.01	2. 3

注：回油管应单独接回油槽内，且回油口要高于油面，以免产生背压。
The drain port should be independently connected to oil tank to avoid back pressure.

ROTARY CYLINDER

KY-T 短型中空回转油压缸(1)

SHORT TYPE ROTATING HYDRAULIC CYLINDER WITH THROUGH-HOLE AND SAFETY DEVICE

1. 高速短型、大孔径，体积小、重量轻。
2. 高转速状态性能稳定、减轻机械负荷。
3. 油缸内藏止回阀结构，突发压降时仍可保持压力。
4. 安装方便，可任意前锁或后锁固定。

1. High speed short form,large Through-Hole, are light-weight.
2. Meanwhile, the compactness and miniaturization lower the burden of machines.
3. With built-in"check valve",work pieces can be effectively prevented from flying out during abrupt failure of pressure.
4. Easy instauation,the optional front end or back end screw it.

尺寸图 Size Fig

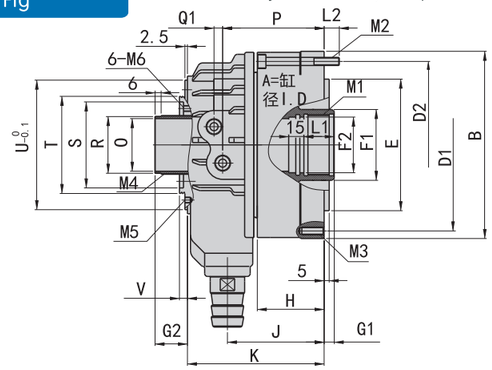

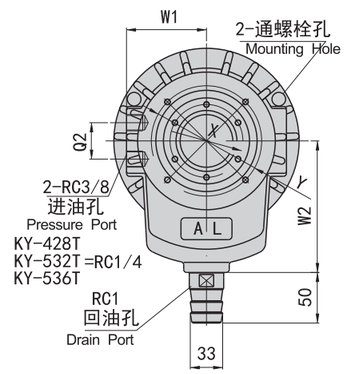

尺寸参数 Dimensions

mm

规格 Spec / 型号 Model	A Piston Dia	B	D1	D2	E (H7)	F1	F2 (H8)	G1 max	G1 min	G2 max	G2 min	H	J	K	L1	L2	M1	M2
KY-428T	90	124	100	108	80	40	30	10	0	35	25	61	94.5	139	25	13	M33X1.5	6-M8X65
KY-532T	105	141	115	125	100	48	35	15		40		70	107.5	148			M38X1.5	6-M8X75
KY-536T							38										M42X1.5	
KY-642T	125	156	130	140		65	45										M50X2	
KY-646T							50										M55X2	
KY-846T	145	185	170	165	130	70	55	20		45		72		150	30	12	M60X2	

尺寸参数 Dimensions

mm

规格 Spec / 型号 Model	M3	M4	M5	O	P	Q1	Q2	R	S	T	U	V	W1	W2	X	Y
KY-428T	6-M8X16	M34X1.5	4-M5	28	99	9	24	32	52	60	88	6	56.5	100	44	76
KY-532T	6-M10X16	M44X1.5	4-M5X6	32	108		30	42	62	70	98		62	110	54	83
KY-536T				36												
KY-642T	12-M10X20	M52X1.5		42			32	50	76	85	116		70	120	64	98
KY-646T				46												
KY-846T		M58X1.5	4-M6X6		110		36	56	85	96	128	7	79	130	73	110
KY-852T				52												

性能参数 Specifications

规格 Spec / 型号 Model	活塞面积 Eff.piston area cm² 推侧 Extend	拉侧 Retract	活塞行程 mm piston stroke	极限转速 r/min Max. speed	最大使用压力 (Mpa) Max. pressure Kgf/cm²	最大推拉力 Max.pull Force kgf(KN) 推侧 Extend	拉侧 Retract	惯量 Kg.m² Moment of inertia	重量 kg Weight	总泄漏量 l/min Total oil leakage
KY-428T	51.9	51	10	7000	40(4.0)	1868(18.3)	1836(18)	0.01	5.8	2.6
KY-532T	70.8	68.5	15	6000		2548(25)	2466(24.2)	0.012	6.1	3
KY-536T										
KY-642T	99.1	88				3567(35)	3168(31)	0.018	8.5	
KY-646T										
KY-846T	135.3	125	20	5500		4870(47.7)	4500(44.1)	0.035	11.8	3.9
KY-852T										

注：泄油管应单独接回油槽内.且回油口要高于油面，以免产生背压。
The drain port should be independently connected to oil tanx the discharge port drain should be located upper the oil levei in the tank to avoid back pressure

ROTARY CYLINDER

KY-T 短型中空回转油压缸(2)

SHORT TYPE ROTATING HYDRAULIC CYLINDER WITH THROUGH-HOLE AND SAFETY DEVICE

1. 高速短型、大孔径，体积小、重量轻。
2. 高转速状态性能稳定、减轻机械负荷。
3. 油缸内藏止回阀结构，突发压降时仍可保持压力。
4. 安装方便，可任意前锁或后锁固定。

1. High speed short form,large Through-Hole, are light-weight.
2. Meanwhile, the compactness and miniaturization lower the burden of machines.
3. With built-in"check valve",work pieces can be effectively prevented from flying out during abrupt failure of pressure.
4. Easy instauation,the optional front end or back end screw it.

尺寸图 Size Fig

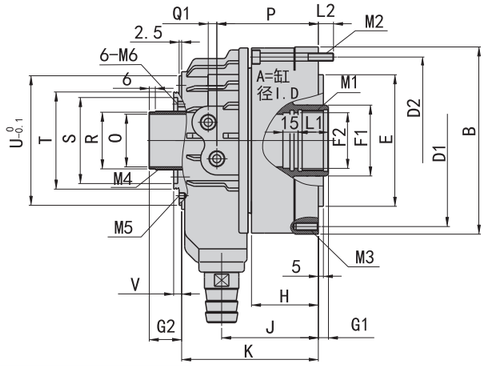

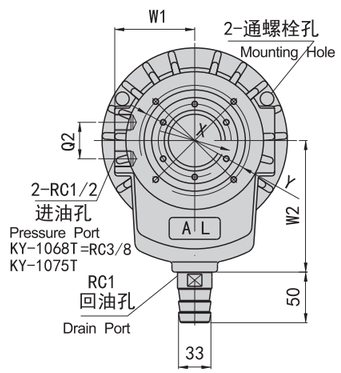

尺寸参数 Dimensions

mm

规格 / 型号	A	B	D1	D2	E (H7)	F1	F2 (H8)	G1 max	G1 min	G2 max	G2 min	H	J	K	L1	L2	M1	M2
KY-1068T	175	215	190	190	160	95	70	25	0	50	25	94	136	188	35	16	M75X2	6-M10X100
KY-1075T							80										M85X2	
KY-1287T	205	240	215	220	180	110	90			55		100	145	205			M95X2	6-M10X105
KY-1291T							95										M100X2	
KY-1511T	250	305	275	280	230	140	115	30				113	156	245	35		M120X2	6-M12X120
KY-1512T							125										M130X2	

尺寸参数 Dimensions

mm

规格 / 型号	M3	M4	M5	O	P	Q1	Q2	R	S	T	U	V	W1	W2	X	Y
KY-1068T	12-M10X20	M84X2	4-M6X8	68	139	12	36	81	108	121	164	7	98	160	98	155
KY-1075T				75												
KY-1287T	12-M12X24	M99X2		87	148	14	40	96	125	135	180		110	185	110	165
KY-1291T				91												
KY-1511T	12-M16X32	M129X2	4-M6X10	110	172	17	50	126	150	170	227		134	210	138	210
KY-1512T				120												

性能参数 Specifications

规格 Spec / 型号 Model	活塞面积 Eff.piston area cm² 推侧 Extend	拉侧 Retract	活塞行程 mm piston stroke	极限转速 r/min Max. speed	最大使用压力 (Mpa) Max. pressure Kgf/cm²	最大推拉力 Max.pull Force kgf(KN) 推侧 Extend	拉侧 Retract	惯量 Kg.m² Moment of inertia	重量 kg Weight	总泄漏量 l/min Total oil leakage
KY-1068T	182.7	169.5	25	4500	40(4.0)	6577(64.5)	6102(59.8)	0.08	17.8	4.2
KY-1075T									17	
KY-1287T	249.3	232.8	30	3800		8975(87.9)	8380(82.1)	0.11	26.5	4.5
KY-1291T									24.8	
KY-1511T	356.5	335.3		3000		12830(125.7)	12070(118.3)	0.38	53.6	7.0
KY-1512T									49.5	

注：泄油管应单独接回油槽内.且回油口要高于油面，以免产生背压。
The drain port should be independently connected to oil tanx the discharge port drain should be located upper the oil levei in the tank to avoid back pressure

ROTARY CYLINDER

SY 中实回转油压缸

ROTATING HYDRAULIC CYLINDER

1. 油缸体采用优质铝合金制造，重量轻、体积小、经久耐用。
2. 高转速状态性能稳定。

1. The cylinder body is made of high quality aluminum alloy, lightweight, small and durable.
2. High speed performance stabiling.

尺寸图 Size Fig

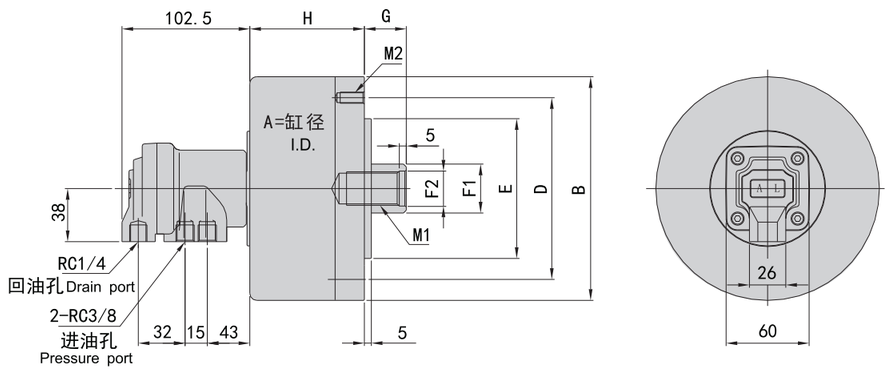

尺寸参数 Dimensions

mm

规格 Spec / 型号 Model	A	B	D	E (H7)	F1	F2 (H8)	G max	G min	H	M1	M2
SY-65	65	98	80	60	22	13	45	30	71	M12X25	6-M8X16
SY-80	80	112	90	65	25	17			73	M16X30	
SY-100	100	135	100	80	28			25	82		6-M10X16
SY-100K						21				M20X35	
SY-125	125	160	130	110	35		50		91		6-M12X18
SY-125K						25				M24X40	
SY-150	150	190			45	31	55		101	M30X45	12-M12X20
SY-200	200	245	145	120	55	37	57	22	126	M36X55	12-M16X28
SY-250	250	296	200 后撬275	160	60		100	40	156		6-M20X30 后撬6-M12

性能参数 Specifications

规格 Spec / 型号 Model	活塞面积 Eff.piston area cm² 推侧 Extend	拉侧 Retract	活塞行程 mm Piston stroke	极限转速 r/min Max. speed	最大使用压力(Mpa) Max. pressure Kgf/cm²	最大推拉力 Max.pull force kgf(KN) 推侧 Extend	拉侧 Retract	惯量 Kg.m² Moment of inertia	重量 kg Weight
SY-65	31.64	29.38	15	6000	35(3.5)	997(9.8)	925(9.1)	0.01	2.65
SY-80	48.67	45.33				1530(15)	1428(14)		3.6
SY-100	76.93	73.6	20	5500	40(4.0)	2770(27.1)	2650(25.9)	0.04	4.8
SY-100K		71.4					2570(25.2)		
SY-125	120.9	115.55	25	5000		4360(42.7)	4160(40.7)	0.08	6.5
SY-125K		113					4060(39.8)		
SY-150	176.7	160.7	30			6300(61.7)	5730(56.2)	0.18	10.5
SY-200	314.1	290.4	35	4000		11300(110.8)	10454(102.4)	0.38	18.7
SY-250	485.7	462.3	60	2000	35(3.5)	15300(150)	14560(142.7)	0.96	35

注:回油管应单独接回油槽内,且回油口要高于油面,以免产生背压。
The drain port should be independently connected to oil tank to avoid back pressure.

ROTARY CYLINDER

SY-H 中实回转油压缸

ROTATING HYDRAULIC CYLINDER

1. 油缸体采用优质铝合金制造，重量轻、体积小、经久耐用。
2. 高转速状态性能稳定。
3. 安装时可直接由后端拧紧固定。

1. The cylinder body is made of high quality aluminum alloy, lightweight, small and durable.
2. High speed performance stabiling.
3. Can screw it from the rear and of the cyindor when mounting.

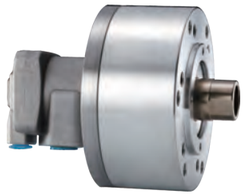

尺寸图 Size Fig

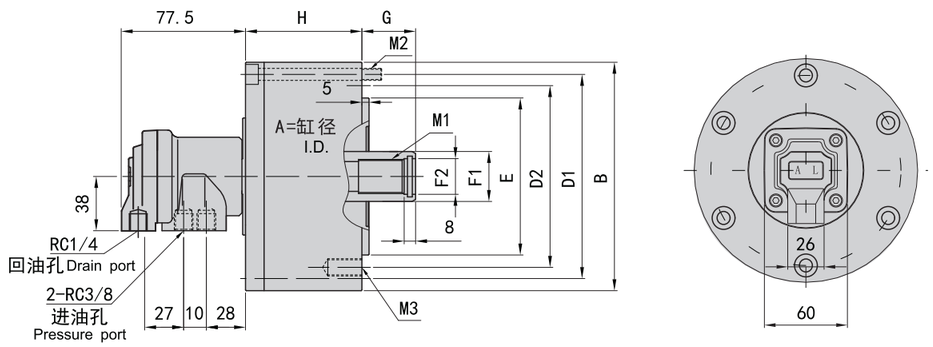

尺寸参数 Dimensions

mm

规格 Spec / 型号 Model	A	B	D1	D2	E (H7)	F1	F2 (H8)	G max	G min	H	M1	M2	M3
SY-75H	75	107	90	90	65	28	21	45	30	60	M20X35	M8X60	6-M8X16
SY-100H	100	135	115	100	80	28	21	45	25	77	M20X35	M8X75	6-M10X20
SY-125H	125	160	140	130	110	35	25	50		85	M24X40	M8X85	6-M12X20
SY-150H	150	190	170			45	31	55		98	M30X45	M10X100	12-M12X24
SY-200H	200	245	220	145	120	55	37	70	35	118	M36X60	M10X125	12-M16X30
SY-250H	250	296	275	200	160	60	37	100	40	156	M36X60	M12X160	12-M20X30

性能参数 Specifications

规格 Spec / 型号 Model	活塞面积 Eff.piston area cm² 推侧 Extend	拉侧 Retract	活塞行程 mm Piston stroke	极限转速 r/min Max. speed	最大使用压力(Mpa) Max. pressure Kgf/cm²	最大推拉力 Max.pull force kgf(KN) 推侧 Extend	拉侧 Retract	惯量 Kg.m² Moment of inertia	重量 kg Weight
SY-75H	41.7	37	15	6000	40(4.0)	1500(14.7)	1330(13)	0.02	3.2
SY-100H	75.4	70.8	20	5000		2710(26.6)	2550(25)	0.04	4.8
SY-125H	119.6	111.5	25			4300(42.1)	4010(39.3)	0.06	7.2
SY-150H	173.6	159.2	30			6250(61.2)	5730(56.2)	0.10	9.8
SY-200H	314.1	290.4	35	4000		11300(110.8)	10454(102.4)	0.25	15.7
SY-250H	485.7	462.3	60	2000		17500(171.5)	16640(163.0)	0.52	45.5

注:回油管应单独接回油槽内,且回油口要高于油面,以免产生背压。
The drain port should be independently connected to oil tank to avoid back pressure.

ROTARY CYLINDER

SY-Z 附止回阀中实回转油压缸

ROTATING HYDRAULIC CYLINDER WITH SAFETY DEVICE

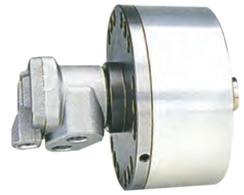

1. 油缸体采用优质铝合金制造，重量轻、体积小、经久耐用。
2. 高转速状态性能稳定。
3. 油缸内藏止回阀结构，突发压降是仍可保持压力。
4.安装时可直接由后端拧紧固定。

1. The cylinder body is made of high quality aluminum alloy, lightweight, small and durable.
2.High speed performance stabiling.
3.With built-in"check valve",work pieces can be effectively prevented from flyingout during abrupt failure of pressure.
4.Can screw it from the rear and of the cyindor when mounting.

尺寸图 Size Fig

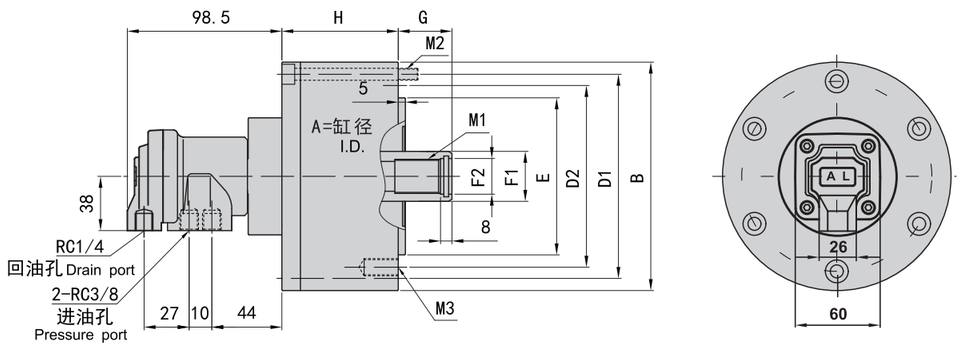

尺寸参数 Dimensions

mm

规格 Spec / 型号 Model	A	B	D1	D2	E (H7)	F1	F2 (H8)	G max	G min	H	M1	M2	M3
SY-75Z	75	107	90	90	65	28	21	45	30	60	M20X35	M8X60	6-M8X16
SY-100Z	100	135	115	100	80	28	21	45		77	M20X35	M8X75	6-M10X20
SY-125Z	125	160	140	130	110	35	25	50	25	85	M24X40	M8X85	6-M12X20
SY-150Z	150	190	170			45	31	55		98	M30X45	M10X100	12-M12X24
SY-200Z	200	245	220	145	120	55	37	70	35	118	M36X60	M10X125	12-M16X30
SY-250Z	250	296	275	200	160	60	37	100	40	156	M36X60	M12X160	12-M20X30

性能参数 Specifications

规格 Spec / 型号 Model	活塞面积 Eff.piston area cm^2 推侧 Extend	拉侧 Retract	活塞行程 mm Piston stroke	极限转速 r/min Max. speed	最大使用压力 (Mpa) Max. pressure Kgf/cm^2	最大推拉力 Max.pull force kgf (KN) 推侧 Extend	拉侧 Retract	惯量 Kg. m^2 Moment of inertia	重量 kg Weight
SY-75Z	41.7	37	15	6000	40 (4.0)	1500 (14.7)	1330 (13)	0.02	3.2
SY-100Z	75.4	70.8	20	5000		2710 (26.6)	2550 (25)	0.04	4.8
SY-125Z	119.6	111.5	25			4300 (42.1)	4010 (39.3)	0.06	7.2
SY-150Z	173.6	159.2	30			6250 (61.2)	5730 (56.2)	0.10	9.8
SY-200Z	314.1	290.4	35	4000		11300 (110.8)	10454 (102.4)	0.25	15.7
SY-250Z	485.7	462.3	60	2000		17500 (171.5)	16640 (163.0)	0.52	45.5

注:回油管应单独接回油槽内，且回油口要高于油面，以免产生背压。
The drain port should be independently connected to oil tank to avoid back pressure.

ROTARY CYLINDER

SY-Q 注气型回转油压缸

ROTATING HYDRAULIC CYLINDER WITH AIR CONNECTION

1. 油缸体采用优质铝合金制造，重量轻、体积小、经久耐用。
2. 高转速状态性能稳定。
3. 安装时可直接由后端拧紧固定。
4. 注气型回转油压缸可从后端供气。
5. 使用时，请混入微量的油雾。

1. The cylinder body is made of high quality aluminum alloy, lightweight, small and durable.
2.High speed performance stabiling.
3.Can screw it from the rear and of the cyindor when mounting.
4.Air jet rotating oil cylinder of can be supplier from the back end.
5.When used,a little oil mist should be contained.

尺寸图 Size Fig

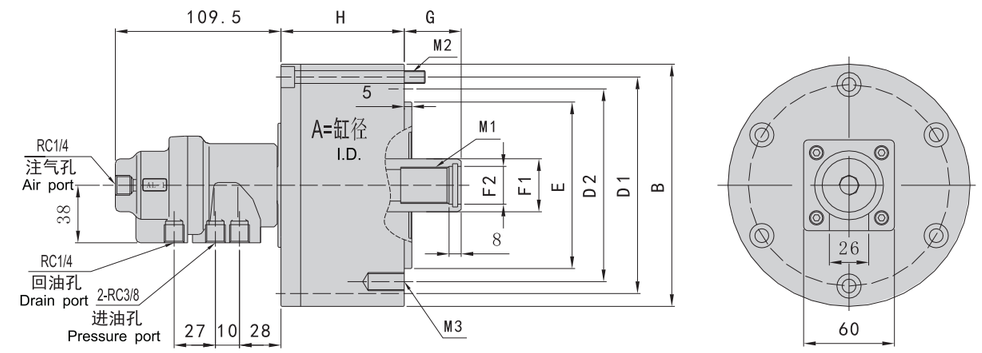

尺寸参数 Dimensions

mm

规格 Spec / 型号 Model	A	B	D1	D2	E (H7)	F1	F2 (H8)	G max	G min	H	M1	M2	M3
SY-75Q	75	107	90	90	65	28	21	45	30	60	M20X35	M8X65	6-M8X16
SY-100Q	100	132	115	100	80	28	21	45		77	M20X35	M8X80	6-M10X20
SY-125Q	125	160	140	130	110	35	25	50	25	85	M24X40	M8X90	6-M12X20
SY-150Q	150	190	170			45	31	55		98	M30X45	M10X100	12-M12X24

性能参数 Specifications

规格 Spec / 型号 Model	活塞面积 Eff.piston area cm^2 推侧 Extend	拉侧 Retract	活塞行程 mm Piston stroke	极限转速 r/min Max. speed	最大使用压力 (Mpa) Max. pressure Kgf/cm^2	注气部最大使用压力 Air connection Max. pressure kgf/cm2 (Mpa)	最大推拉力 Max.pull force kgf (KN) 推侧 Extend	拉侧 Retract	惯量 Kg. m^2 Moment of inertia	重量 kg Weight
SY-75Q	41.7	37	15	6000	40 (4.0)	8 (0.8)	1500 (14.7)	1330 (13)	0.02	4.6
SY-100Q	75.4	70.8	20	5000			2710 (26.6)	2550 (25)	0.04	4.8
SY-125Q	119.6	111.5	25				4300 (42.1)	4010 (39.3)	0.06	6.5
SY-150Q	173.6	159.2	30				6250 (61.2)	5730 (56.1)	0.10	10.5

注:回油管应单独接回油槽内，且回油口要高于油面，以免产生背压。
The drain port should be independently connected to oil tank to avoid back pressure.

ROTARY CYLINDER

SY-ZQ 附止回阀注气型回转油压缸

ROTATING HYDRAULIC CYLINDER WITH AIR CONNECTION AND SAFETY DEVICE

1. 油缸体采用优质铝合金制造，重量轻、体积小、经久耐用。
2. 高转速状态性能稳定。
3. 油缸内藏止回阀结构，突发压降是仍可保持压力。
4.安装时可直接由后端拧紧固定。
5.注气型回转油压缸可从后端供气。
6.使用时，请混入微量的油雾。

1. The cylinder body is made of high quality aluminum alloy, lightweight, small and durable.
2.High speed performance stabiling.
3.With built-in"check valve",work pieces can be effectively prevented from flying out during abrupt failure of pressure.
4.Can screw it from the rear and of the cyindor when mounting.
5.Air jet rotating oil cylinder of can be supplier from the back end.
6.When used,a little oil mist should be contained.

尺寸图 Size Fig

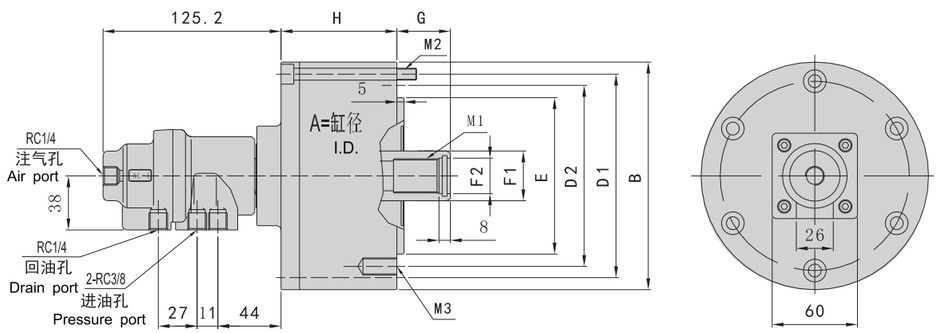

尺寸参数 Dimensions

mm

规格 Spec / 型号 Model	A	B	D1	D2	E (H7)	F1	F2 (H8)	G max	G min	H	M1	M2	M3
SY-75ZQ	75	107	90	90	65	28	21	45	30	60	M20X35	M8X65	6-M8X16
SY-100ZQ	100	132	115	100	80	28	21	45		77	M20X35	M8X80	6-M10X20
SY-125ZQ	125	160	140	130	110	35	25	50	25	85	M24X40	M8X90	6-M12X20
SY-150ZQ	150	190	170			45	31	55		98	M30X45	M10X100	12-M12X24

性能参数 Specifications

规格 Spec / 型号 Model	活塞面积 Eff.piston area cm^2 推侧 Extend	拉侧 Retract	活塞行程 mm Piston stroke	极限转速 r/min Max. speed	最大使用压力(Mpa) Max. pressure Kgf/cm^2	注气部最大使用压力 Air connection Max. pressure kgf/cm2 (Mpa)	最大推拉力 Max.pull force kgf(KN) 推侧 Extend	拉侧 Retract	惯量 Kg.m^2 Moment of inertia	重量 kg Weight
SY-75ZQ	41.7	37	15	6000	40(4.0)	8(0.8)	1500(14.7)	1330(13)	0.02	4.6
SY-100ZQ	75.4	70.8	20	5000			2710(26.6)	2550(25)	0.04	4.8
SY-125ZQ	119.6	111.5	25				4300(42.1)	4010(39.3)	0.06	6.5
SY-150ZQ	173.6	159.2	30				6250(61.2)	5730(56.1)	0.10	10.5

注:回油管应单独接回油槽内,且回油口要高于油面,以免产生背压。
The drain port should be independently connected to oil tank to avoid back pressure.

ROTARY CYLINDER

SY-S 注水型回转油压缸

ROTATING HYDRAULIC CYLINDER WITH COOLANT CONNECTION

1. 油缸体采用优质铝合金制造，重量轻、体积小、经久耐用。
2. 高转速状态性能稳定。
3. 注水型回转油压缸可从后端供水。
4. 注水部无流体通过时，请勿运转。

1. The cylinder body is made of high quality aluminum alloy, lightweight,small and durable.
2.High speed performance stabiling.
3.Waterflood rotary oil cylinder can be supplier from the back and.
4.The rotary cylinder should not run without liquid throughn coolant port.

尺寸图 Size Fig

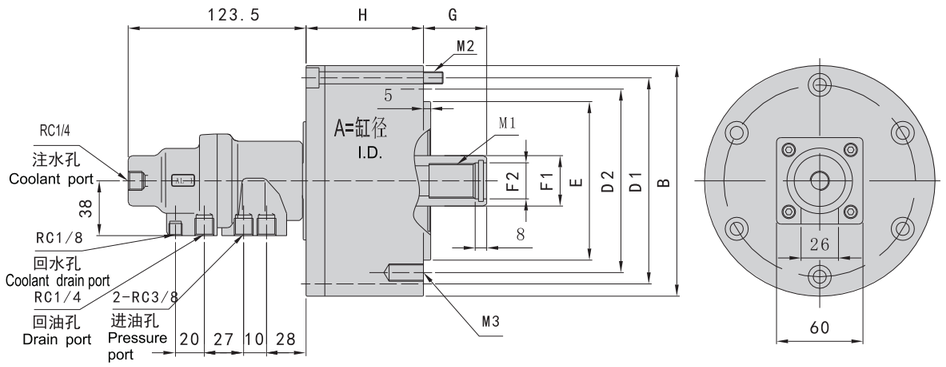

尺寸参数 Dimensions

mm

规格 Spec / 型号 Model	A	B	D1	D2	E (H7)	F1	F2 (H8)	G max	G min	H	M1	M2	M3
SY-75S	75	107	90	90	65	28	21	45	30	60	M20X35	M8X65	6-M8X16
SY-100S	100	132	115	100	80	28	21	45		77	M20X35	M8X80	6-M10X20
SY-125S	125	160	140	130	110	35	25	50	25	85	M24X40	M8X90	6-M12X20
SY-150S	150	190	170			45	31	55		98	M30X45	M10X100	12-M12X24

性能参数 Specifications

规格 Spec / 型号 Model	活塞面积 Eff.piston area cm^2 推侧 Extend	拉侧 Retract	活塞行程 mm Piston stroke	极限转速 r/min Max. speed	最大使用压力(Mpa) Max. pressure Kgf/cm^2	注气部最大使用压力 Air connection Max: pressure kgf/cm2 (Mpa)	最大推拉力 Max.pull force kgf(KN) 推侧 Extend	拉侧 Retract	惯量 Kg.m^2 Moment of inertia	重量 kg Weight
SY-75S	41.7	37	15	6000	40(4.0)	35(3.5)	1500(14.7)	1330(13)	0.02	4.6
SY-100S	75.4	70.8	20	5000			2710(26.6)	2550(25)	0.04	4.8
SY-125S	119.6	111.5	25				4300(42.1)	4010(39.3)	0.06	6.5
SY-150S	173.6	159.2	30				6250(61.2)	5730(56.1)	0.10	10.5

注:回油管应单独接回油槽内,且回油口要高于油面,以免产生背压。
The drain port should be independently connected to oil tank to avoid back pressure.

ROTARY CYLINDER

SY-ZS 附止回阀注水型回转油压缸

ROTATING HYDRAULIC CYLINDER WITH COOLANT CONNECTION AND SAFETY DEVICE

1. 油缸体采用优质铝合金制造，重量轻、体积小、经久耐用。
2. 高转速状态性能稳定。
3. 油缸内藏止回阀结构，突发压降是仍可保持压力。
4. 注水型回转油压缸可从后端供水。
5. 注水部无流体通过时，请勿运转。

1. The cylinder body is made of high quality aluminum alloy, lightweight,small and durable.
2. High speed performance stabiling.
3. With built-in"check valve",work pieces can be effectively prevented from flying out during abrupt failure of pressure.
4. Waterflood rotary oil cylinder can be supplied from the back end.
5. The rotary cylinder should not run without liquid through coolant port.

尺寸图 Size Fig

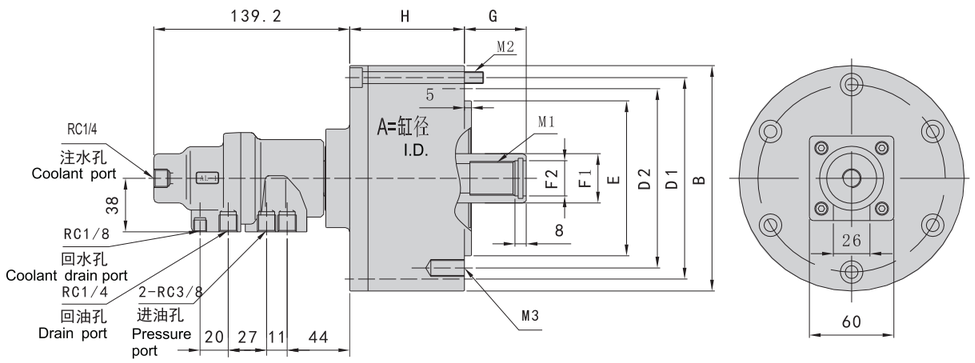

尺寸参数 Dimensions

mm

规格 Spec / 型号 Model	A	B	D1	D2	E (H7)	F1	F2 (H8)	G max	G min	H	M1	M2	M3
SY-75ZS	75	107	90	90	65	28	21	45	30	60	M20X35	M8X65	6-M8X16
SY-100ZS	100	132	115	100	80	28	21	45		77	M20X35	M8X80	6-M10X20
SY-125ZS	125	160	140	130	110	35	25	50	25	85	M24X40	M8X90	6-M12X20
SY-150ZS	150	190	170			45	31	55		98	M30X45	M10X100	12-M12X24

性能参数 Specifications

规格 Spec / 型号 Model	活塞面积 Eff.piston area cm² 推侧 Extend	活塞面积 Eff.piston area cm² 拉侧 Retract	活塞行程 mm Piston stroke	极限转速 r/min Max. speed	最大使用压力(Mpa) Max.pressure Kgf/cm²	注气部最大使用压力 Air connection Max. pressure kgf/cm2 (Mpa)	最大推拉力 Max.pull force kgf(KN) 推侧 Extend	最大推拉力 Max.pull force kgf(KN) 拉侧 Retract	惯量 Kg.m² Moment of inertia	重量 kg Weight
SY-75ZS	41.7	37	15	6000	40(4.0)	35(3.5)	1500(14.7)	1330(13)	0.02	4.6
SY-100ZS	75.4	70.8	20	5000			2710(26.6)	2550(25)	0.04	4.8
SY-125ZS	119.6	111.5	25				4300(42.1)	4010(39.3)	0.06	6.5
SY-150ZS	173.6	159.2	30				6250(61.2)	5730(56.1)	0.10	10.5

注:回油管应单独接回油槽内,且回油口要高于油面,以免产生背压。
The drain port should be independently connected to oil tank to avoid back pressure.

ROTARY CYLINDER

SY-X 行程控制型回转油压缸

ROTATING HYDRAULIC CYLINDER WITH STROKE CONTROL

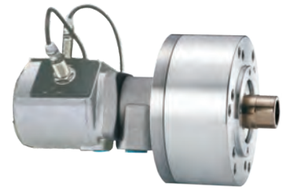

1. 油缸体采用优质铝合金制造，重量轻、体积小、经久耐用。
2. 高转速状态性能稳定。
3. 感应式接近开关，行程易调整，可使油缸正确动作。

1. The cylinder body is made of high quality aluminum alloy, lightweight, small and durable.
2. High speed performance stabiling.
3. Induction typeb is close to switch,the stroke adjustment is easy,can make the cylinder correct action.

尺寸图 Size Fig

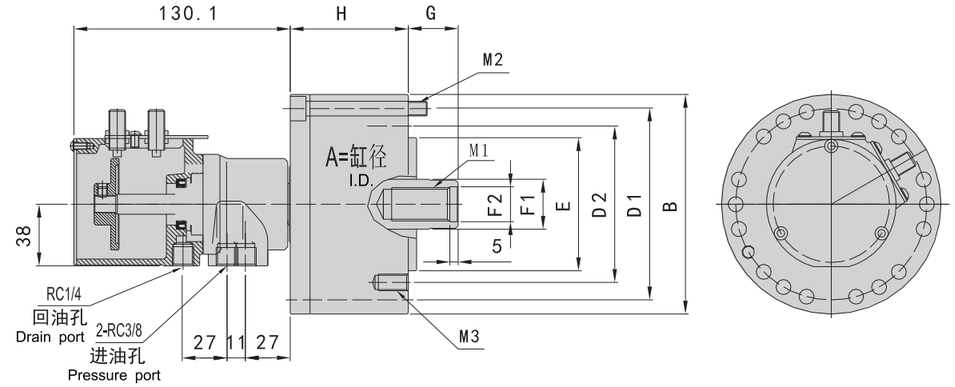

接近开关型号:
Proximity sensor: Model IA12DLF02NO3219(CARLO)DC 10-30V200mA NPN

尺寸参数 Dimensions

mm

规格 Spec / 型号 Model	A	B	D1	D2	E (H7)	F1	F2 (H8)	G max	G min	H	M1	M2	M3
SY-75X	75	107	90	90	65	28	21	45	30	60	M20X35	M8X65	6-M8X16
SY-100X	100	132	115	100	80	28	21	45		77	M20X35	M8X80	6-M10X20
SY-125X	125	160	140	130	110	35	25	50	25	85	M24X40	M8X90	6-M12X20
SY-150X	150	190	170			45	31	55		98	M30X45	M10X100	12-M12X24

性能参数 Specifications

规格 Spec / 型号 Model	活塞面积 Eff.piston area cm² 推侧 Extend	活塞面积 Eff.piston area cm² 拉侧 Retract	活塞行程 mm Piston stroke	极限转速 r/min Max. speed	最大使用压力(Mpa) Max.pressure Kgf/cm²	最大推拉力 Max.pull force kgf(KN) 推侧 Extend	最大推拉力 Max.pull force kgf(KN) 拉侧 Retract	惯量 Kg.m² Moment of inertia	重量 kg Weight
SY-75X	41.7	37	15	6000	40(4.0)	1500(14.7)	1330(13)	0.02	4.6
SY-100X	75.4	70.8	20	5000		2710(26.6)	2550(25)	0.04	4.8
SY-125X	119.6	111.5	25			4300(42.1)	4010(39.3)	0.06	6.5
SY-150X	173.6	159.2	30			6250(61.2)	5730(56.1)	0.10	10.5

注:回油管应单独接回油槽内,且回油口要高于油面,以免产生背压。
The drain port should be independently connected to oil tank to avoid back pressure.

ROTARY CYLINDER

SY-ZX 附止回阀行程控制型回转油压缸

ROTATING HYDRAULIC CYLINDER WITH STROKE CONTROL AND SAFETY DEVICE

1. 油缸体采用优质铝合金制造，重量轻、体积小、经久耐用。
2. 高转速状态性能稳定。
3. 油缸内藏止回阀结构，突发压降是仍可保持压力。
4. 感应式接近开关，行程易调整，可使油缸正确动作。

1. The cylinder body is made of high quality aluminum alloy, lightweight, small and durable.
2. High speed performance stabiling.
3. With built-in"check valve",work pieces can be effectively prevented from flying out during abrupt failure of pressure.
4. Induction type is close to switch,the stroke adjustment isveasy,can make the cylinder correct action.

尺寸图 Size Fig

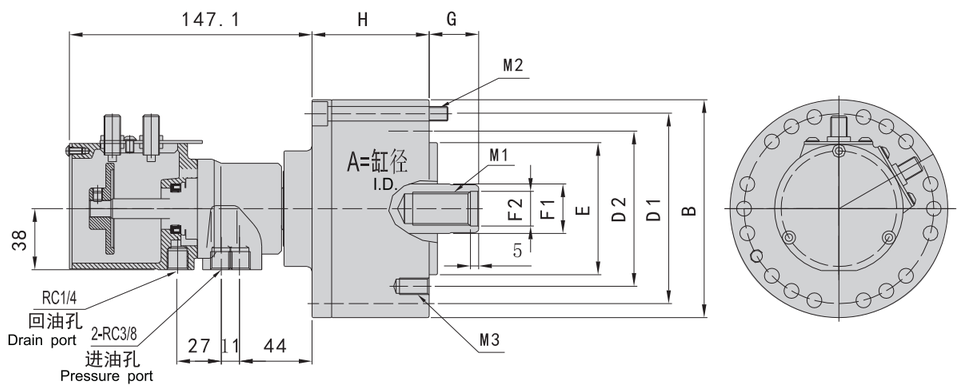

接近开关型号：
Proximity sensor: Model IA12DLF02NO3219(CARLO)DC 10-30V200mA NPN

尺寸参数 Dimensions

mm

规格 Spec / 型号 Model	A	B	D1	D2	E (H7)	F1	F2 (H8)	G max	G min	H	M1	M2	M3
SY-75ZX	75	107	90	90	65	28	21	45	30	60	M20X35	M8X65	6-M8X16
SY-100ZX	100	132	115	100	80	28	21	45	25	77	M20X35	M8X80	6-M10X20
SY-125ZX	125	160	140	130	110	35	25	50		85	M24X40	M8X90	6-M12X20
SY-150ZX	150	190	170			45	31	55		98	M30X45	M10X100	12-M12X24

性能参数 Specifications

规格 Spec / 型号 Model	活塞面积 Eff.piston area cm² 推侧 Extend	拉侧 Retract	活塞行程 mm Piston stroke	极限转速 r/min Max. speed	最大使用压力(Mpa) Max. pressure Kgf/cm²	最大推拉力 Max.pull force kgf(KN) 推侧 Extend	拉侧 Retract	惯量 Kg.m² Moment of inertia	重量 kg Weight
SY-75ZX	41.7	37	15	6000	40(4.0)	1500(14.7)	1330(13)	0.02	4.6
SY-100ZX	75.4	70.8	20	5000		2710(26.6)	2550(25)	0.04	4.8
SY-125ZX	119.6	111.5	25			4300(42.1)	4010(39.3)	0.06	6.5
SY-150ZX	173.6	159.2	30			6250(61.2)	5730(56.1)	0.10	10.5

注：回油管应单独接回油槽内，且回油口要高于油面，以免产生背压。
The drain port should be independently connected to oil tank to avoid back pressure.

ROTARY CYLINDER

SY-B 双杆型回转油压缸

DOUBLE ROD ROTATING CYLINDER

1. 油缸体采用优质铝合金制造，重量轻、体积小,双杆型油缸。

1. The cylinder body is made of high quality aluminum alloy, light weight,small,double rod rotary cylinder.

尺寸图 Size Fig

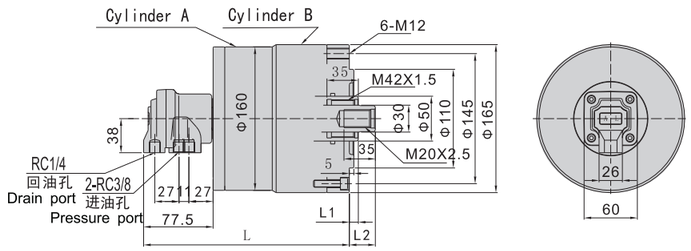

尺寸参数 Dimensions

mm

规格 Spec / 型号 Model	A	B	L	L1 max.	L1 min	L2 max	L2 min
SY-120B	125	130	215	35	15	60	40
SY-125B			225		10	55	30

性能参数 Specifications

规格 Spec / 型号 Model	活塞面积 Eff.piston area cm² 推侧 Extend A	推侧 Extend B	拉侧 Retract A	拉侧 Retract B	活塞行程 mm Piston stroke	极限转速 r/min Max. speed	最大使用压力(Mpa) Max. pressure Kgf/cm²	惯量 Kg.m² Moment of inertia	重量 kg Weight
SY-120B	122.7	126	116	113	20	5000	30(3.0)	0.14	11.2
SY-125B					25			0.15	11.4

SY-ZB 附止回阀双杆型回转油压缸

DOUBLE ROD ROTATING CYLINDER WITH SAFETY DEVICE

1. 油缸体采用优质铝合金制造，重量轻、体积小,双杆型油缸。
2. 油缸内藏止回阀结构，突发压降是仍可保持压力。

1. The cylinder body is made of high quality aluminum alloy, light weight,small,double rod rotary cylinder.
2. With built-in"check valve",work pieces can be effectively prevented from flying out during abrupt failure of pressure.

尺寸图 Size Fig

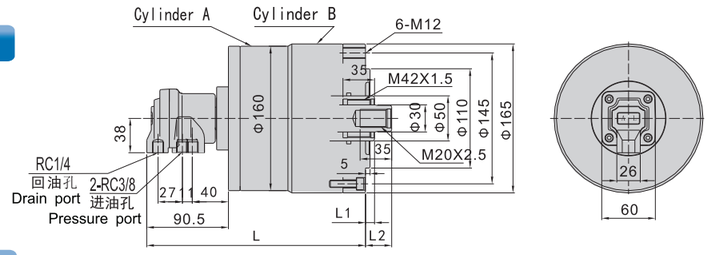

尺寸参数 Dimensions

mm

规格 Spec / 型号 Model	A	B	L	L1 max.	L1 min	L2 max	L2 min
SY-120ZB	125	130	228	35	15	60	40
SY-125ZB			238		10	55	30

性能参数 Specifications

规格 Spec / 型号 Model	活塞面积 Eff.piston area cm² 推侧 Extend A	推侧 Extend B	拉侧 Retract A	拉侧 Retract B	活塞行程 mm Piston stroke	极限转速 r/min Max. speed	最大使用压力(Mpa) Max. pressure Kgf/cm²	惯量 Kg.m² Moment of inertia	重量 kg Weight
SY-120ZB	122.7	126	116	113	20	5000	30(3.0)	0.14	11.2
SY-125ZB					25			0.15	11.4

注：回油管应单独接回油槽内，且回油口要高于油面，以免产生背压。
The drain port should be independently connected to oil tank to avoid back pressure.

ROTARY CYLINDER

SY-BK 双杆双控型回转油压缸

SEPARATE CONTROL OF DOUBLE ROD ROTATING CYLINDER

1. 油缸体采用优质铝合金制造，重量轻、体积小、经久耐用。
2. 两活塞杆可单独控制。

1. The cylinder body is made of high quality aluminum alloy, lightweight, small and durable.
2. Two piston rod can be controlled independently.

尺寸图 Size Fig

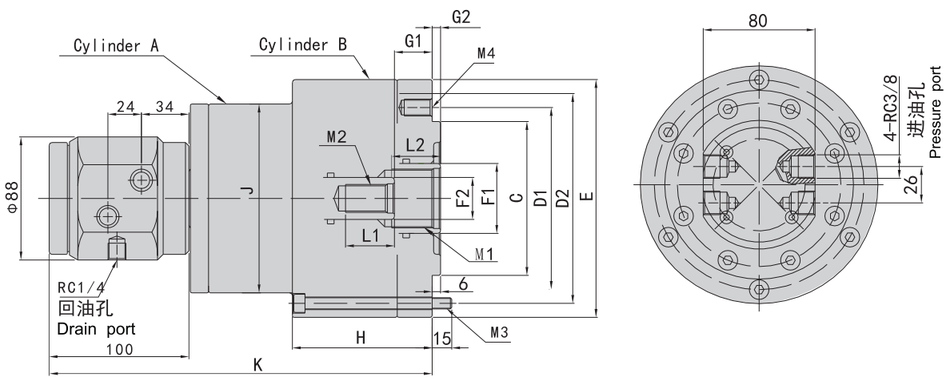

尺寸参数 Dimensions

mm

规格 Spec / 型号 Model	A	B	C (h7)	D1	D2	E	F1	F2 (H8)	G1 max	G1 min	G2 max	G2 min	H	J	K	L1	L2	M1	M2	M3	M4
SY-100-130BK	100	130	110	130	150	170	50	30	8	-27	41	6	100	135	280	35	45	M42X1.5	M20	M8X105	6-M12

性能参数 Specifications

规格 Spec / 型号 Model	活塞面积 Eff.piston area cm² 推侧 Extend A	推侧 Extend B	拉侧 Retract A	拉侧 Retract B	活塞行程 mm Piston stroke A	Piston stroke B	极限转速 r/min Max. speed	最大使用压力 (Mpa) Max. pressure Kgf/cm²	最大推拉力 Max.pull force kgf (KN) 推侧 Extend A	推侧 Extend B	拉侧 Retract A	拉侧 Retract B	惯量 Kg.m² Moment of inertia	重量 kg Weight
SY-100-130BK	76.9	124	69.9	111.4	35	35	4000	35 (3.5)	2690 (26.3)	4340 (42.5)	2445 (24)	3900 (38.2)	0.2	16

注:回油管应单独接回油槽内,且回油口要高于油面,以免产生背压。
The drain port should be independently connected to oil tank to avoid back pressure.

ROTARY CYLINDER

JS/JS-X 接水罩与行程控制

COOLANT COLLECTOR WITHU STROKE CONTROL

接近开关 Proximity switch

型号 Model	E2E-X2E1-Z (Omron)
规格 Spec	
电压 Power supply	DC10-30V
负荷容量 Switching cap.	200mA
输出规格 Output tpye	NPN

代号 Mark	端子连接 Terminal Connections
Op2	黑 BLACK
+V	棕 BROWN
0V	蓝 BLUE
Op1	黑 BLACK

接近开关是选购品
The proximity switch is optional.

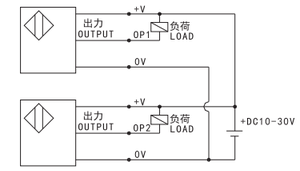

接近开关接线图
Proximity switch wiring diagram

尺寸图 Size Fig

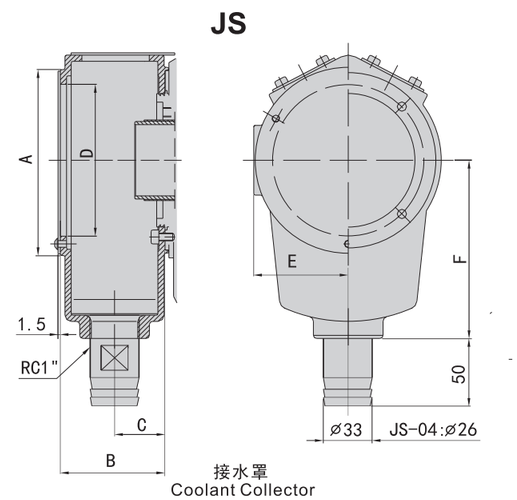

接水罩
Coolant Collector

Fig 1

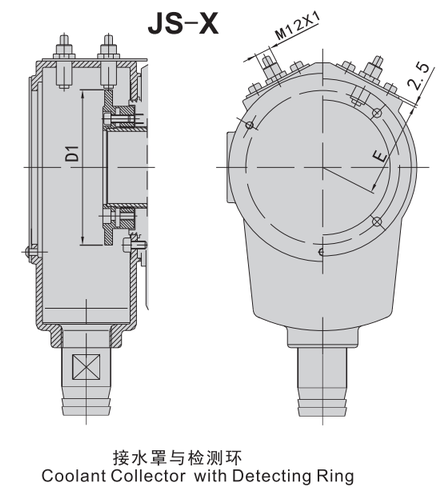

接水罩与检测环
Coolant Collector with Detecting Ring

Fig 2

尺寸参数 Dimensions

mm

规格 Spec / 型号 Model	A	B	C	D	D1	E	F	适用油压缸 Matching cyl.	重量 Weight kg	图 Fig
JS-04	98	60	30	79	78	50	100	KY-428T	0.88	Fig 1
JS-04X									1.06	Fig 2
JS-05	120	70	35	100	88	61	115	KY-532T, KY-536T, KY-642T, KY-646T		
JS-05X										
JS-06					99				1.15	Fig 1
JS-06X									1.40	Fig 2
JS-08	138	76	38	110	105	70	130	KY-846T, KY-852T	1.2	Fig 1
JS-08X									1.7	Fig 2
JS-10	185	85	42	158	128	94	160	KY-1068T, KY-1075T KY-1287T, KY-1291T		
JS-10X										
JS-12					143				1.8	Fig 1
JS-12X									2.5	Fig 2
JS-15	235	90	45	206	196	120	210	KY-1511T, KY-1512T	2.9	Fig 1
JS-15X									4.1	Fig 2

ACCESSORIES